TABLE OF CONTENTS

1.0 INTRODUCTION 1

1.1 SYSTEM COVERAGE 1
1.2 SIX-STEP TROUBLESHOOTING PROCEDURE 1

2.0 IDENTIFICATION OF SYSTEM 1

3.0 SYSTEM DESCRIPTION AND FUNCTIONAL OPERATION 1

3.1 AIRBAG SYSTEM 1
3.1.1 DRIVER AIRBAG (DAB) 2
3.1.2 CLOCKSPRING 3
3.1.3 PASSENGER AIRBAG (PAB) 3
3.1.4 SIDE IMPACT AIRBAG CONTROL MODULES (SIACM) 3
3.1.5 SEAT AIRBAGS 3
3.1.6 SPECIAL TOOLS 4
3.1.7 DIAGNOSTIC TROUBLE CODES 4
3.1.7.1 ACTIVE CODES 4
3.1.7.2 STORED CODES 5
3.2 AUDIO SYSTEM 5
3.3 COMPASS/TEMPERATURE MIRROR 5
3.4 EXTERIOR LIGHTING 8
3.5 ELECTRO/MECHANICAL INSTRUMENT CLUSTER (EMIC) 8
3.6 INTERIOR LIGHTING 9
3.7 REMOTE KEYLESS ENTRY MODULE 9
3.7.1 VEHICLE THEFT SECURITY SYSTEM 9
3.7.2 VEHICLE THEFT SECURITY SYSTEM (EXPORT ONLY) 10
3.7.3 POWER DOOR LOCKS 10
3.7.3.1 CENTRAL LOCKING (W/VTSS ONLY) 10
3.7.3.2 ROLLING (AUTOMATIC) DOOR LOCKS 10
3.7.3.3 DOOR LOCK INHIBIT 10
3.7.3.4 POWER DECKLID RELEASE 10
3.7.3.5 PANIC MODE (IF EQUIPPED) 10
3.8 VEHICLE COMMUNICATION 10
3.9 USING THE DRBIII® 12
3.9.1 DRBIII® ERROR MESSAGES AND BLANK SCREEN 12
3.9.2 DRBIII® DOES NOT POWER UP 12
3.9.3 DISPLAY IS NOT VISIBLE 12

4.0 DISCLAIMERS, SAFETY, WARNINGS 13

4.1 DISCLAIMERS 13
4.2 SAFETY 13
4.2.1 TECHNICIAN SAFETY INFORMATION 13
4.2.2 VEHICLE PREPARATION FOR TESTING 13
4.2.3 SERVICING SUB-ASSEMBLIES 13
4.2.4 DRBIII® SAFETY INFORMATION 13
4.3 WARNINGS 14
4.3.1 VEHICLE DAMAGE WARNINGS 14
4.3.2 ROAD TESTING A COMPLAINT VEHICLE 14

5.0 REQUIRED TOOLS AND EQUIPMENT 14

6.0 GLOSSARY OF ACRONYMS 14

7.0 DIAGNOSTIC INFORMATION AND PROCEDURES 15

AIRBAG
ACCELEROMETER 1 16
ACCELEROMETER 2 16
INTERNAL 1 16
OUTPUT DRIVER 1 16
OUTPUT DRIVER 2 16
SAFING SENSOR 16
STORED ENERGY FIRING 1 16
STORED ENERGY LOGIC 16
AIRBAG WARNING INDICATOR OPEN 19
AIRBAG WARNING INDICATOR SHORT 19
CLUSTER MESSAGE MISMATCH 21
CONFIGURATION ERROR 23
DRIVER SQUIB 1 CIRCUIT OPEN 25
DRIVER SQUIB 1 CIRCUIT SHORT 28
DRIVER SQUIB 1 SHORT TO BATTERY 31
DRIVER SQUIB 1 SHORT TO GROUND 34
INTERROGATE LEFT SIACM 37
INTERROGATE RIGHT SIACM 39
LOSS OF IGNITION RUN - START 41
LOSS OF IGNITION RUN ONLY 44
MODULE NOT CONFIGURED FOR SAB 47
NO CLUSTER MESSAGE 49
NO LEFT SIACM MESSAGE 51
NO PCI TRANSMISSION 53
NO RIGHT SIACM MESSAGE 56
PASSENGER SQUIB 1 CIRCUIT OPEN 58
PASSENGER SQUIB 1 CIRCUIT SHORT 61
PASSENGER SQUIB 1 SHORT TO BATTERY 64
PASSENGER SQUIB 1 SHORT TO GROUND 67
SEAT SQUIB CIRCUIT OPEN 70
SEAT SQUIB CIRCUIT SHORT 73
SEAT SQUIB SHORT TO BATTERY 76
SEAT SQUIB SHORT TO GROUND 79
*AIRBAG INDICATOR ON WITHOUT ACM TROUBLE CODES 82

AUDIO
ALL OUTPUTS SHORT 83
CASSETTE PLAYER INOP 86
CD MECHANICAL FAILURE 86
NO PCI TRANSMISSION 86
*AM/FM SWITCH INOPERATIVE 86
*ANY STATION PRESET SWITCH INOPERATIVE 86
*BALANCE INOPERATIVE 86
*CD EJECT SWITCH INOPERATIVE 86
*EQUALIZER INOPERATIVE 86
*FADER INOPERATIVE 86
*FF/RW SWITCH INOPERATIVE 86
*HOUR/MINUTE SWITCHES INOPERATIVE 86
*PAUSE/PLAY SWITCH INOPERATIVE 86
*PWR SWITCH INOPERATIVE 86

*SCAN SWITCH INOPERATIVE. 86
*SEEK SWITCH INOPERATIVE. 86
*SET SWITCH INOPERATIVE 86
*TAPE EJECT SWITCH INOPERATIVE. 86
*TIME SWITCH INOPERATIVE 86
*TUNE SWITCH INOPERATIVE. 86
CD CHANGER MECHANICAL FAILURE. 88
CD CHANGER READ FAILURE. 89
CD CHANGER TEMPERATURE HIGH 90
CD PLAY FAILURE 91
CD READ FAILURE 92
CD TEMPERATURE HIGH. 93
LOW VOLTAGE LEVEL 94
NO ANTENNA CONNECTION 95
POWER AMP SHUTDOWN 96

COMMUNICATION
*NO RESPONSE FROM ACM 99
*NO RESPONSE FROM COMPASS/TEMPERATURE MIRROR. 101
*NO RESPONSE FROM CONTROLLER ANTILOCK BRAKE 103
*NO RESPONSE FROM INSTRUMENT CLUSTER 105
*NO RESPONSE FROM LEFT SIACM 107
*NO RESPONSE FROM PCM (PCI BUS) - NGC. 109
*NO RESPONSE FROM PCM (PCM SCI ONLY) - NGC 110
*NO RESPONSE FROM RADIO 113
*NO RESPONSE FROM RIGHT SIACM 115
*NO RESPONSE FROM RKE 117
*NO RESPONSE FROM SENTRY KEY IMMOBILIZER MODULE. 119
*NO RESPONSE FROM TRANSMISSION CONTROL MODULE - NGC 121
*PCI BUS COMMUNICATION FAILURE 124

COMPASS/MINI-TRIP COMPUTER
COMPASS/TEMPERATURE MIRROR INTERNAL FAILURE. 127
*COMPASS/TEMPERATURE MIRROR DOES CALIBRATE 128
*COMPASS/TEMPERATURE MIRROR INOPERATIVE 130
*TEMPERATURE DISPLAY INOPERATIVE OR WRONG (2.0L ONLY). 132

EXTERIOR LIGHTING
*HIGH BEAM HEADLAMPS WILL NOT TRN ON 133
*HIGH BEAM HEADLAMPS WILL NOT TURN OFF. 135
*LOW BEAM HEADLAMPS WILL NOT TURN OFF 136
*LOW BEAM HEADLAMPS WILL NOT TRN ON 137

INSTRUMENT CLUSTER
ABS INDICATOR CIRCUIT OPEN 139
AIRBAG INDICATOR CIRCUIT OPEN. 139
ABS MESSAGE NOT RECEIVED 140
ACM MESSAGE NOT RECEIVED. 140
EATX MESSAGE NOT RECEIVED 140
SBEC MESSAGE NOT RECEIVED. 140
SKIM MESSAGE NOT RECEIVED 140
BATTERY LOSS 142
CLUSTER BUS TX SHUTDOWN. 144

NO PCI BUS TRANSMISSION 144
EATX MISMATCH 145
FUEL LEVEL SENSOR OPEN 146
FUEL LEVEL SENSOR SHORT 148
PANEL DIMMER OPEN 150
*ALL GAUGES INOPERATIVE 152
*ANY OR ALL GAUGE POINTER(S) ON WRONG SIDE OF STOP 154
*ANY PCI BUS INDICATOR INOPERATIVE 155
*BRAKE WARNING INDICATOR ALWAYS ON 156
*BRAKE WARNING INDICATOR INOPERATIVE 158
*FRONT FOG LAMP INDICATOR INOPERATIVE 161
*FUEL GAUGE INACCURATE 162
*HIGH BEAM INDICATOR INOPERATIVE 164
*INSTRUMENT CLUSTER DIMMING INOPERATIVE 165
*LOW OIL PRESSURE INDICATOR ALWAYS ON 166
*LOW OIL PRESSURE INDICATOR INOPERATIVE 167
*ONE GAUGE INOPERATIVE 169
*PRND OR AUTOSTICK INDICATOR DISPLAY INACCURATE OR INOPERATIVE . 170
*REAR FOG LAMP INDICATOR INOPERATIVE - BUX ONLY 171
*SEATBELT INDICATOR INOPERATIVE 172
*VF DISPLAY INOPERATIVE 174

INTERIOR LIGHTING
*COURTESY LAMPS INOPERATIVE - ALL LAMPS 175
*COURTESY LAMPS ON AT ALL TIMES 176
*ILLUMINATED ENTRY INOPERATIVE 179

POWER DOOR LOCKS/RKE
BODY STYLE MISMATCH 180
DRIVER DOOR SWITCH SHORTED OR STUCK 181
INCORRECT MODULE TYPE CONFIGURATION FOR PART NUMBER 183
INTERIOR DECKLID RELEASE SWITCH SHORTED OR STUCK 184
MODULE NOT CONFIGURED FOR RKE 186
NO AIRBAG MESSAGES RECEIVED 187
NO PCM MESSAGES RECEIVED 188
NO SKIM MESSAGES RECEIVED 189
PASSENGER DOOR SWITCH FAILURE 190
*ALL DOOR LOCKS INOPERATIVE 192
*ALL DOORS EXCEPT DRIVER FAIL TO LOCK AND UNLOCK 196
*ALL DOORS EXCEPT DRIVER FAIL TO UNLOCK 197
*ALL DOORS FAIL TO LOCK 198
*ALL LOCKS INOPERATIVE FROM A DOOR LOCK SWITCH 200
*AUTOMATIC DOOR LOCKS INOPERATIVE 202
*DECKLID SOLENOID INOPERATIVE 203
*DOORS LOCKABLE WITH KEY IN IGNITION & DRIVER DOOR OPEN 204
*DRIVER DOOR FAILS TO LOCK & UNLOCK 206
*DRIVER DOOR FAILS TO UNLOCK 208
*ONE PASSENGER DOOR FAILS TO LOCK & UNLOCK 209
*RKE INOPERATIVE 211

VEHICLE THEFT/SECURITY
HOOD AJAR SWITCH MISSING (EXPORT ONLY) 213
MODULE PREVIOUSLY CONFIGURED FOR VTSS 215

*ALARM TRIPS ON ITS OWN 216
*HEADLAMPS FAIL TO FLASH DURING ALARM 217
*HORN FAILS TO SOUND DURING ALARM 218
*INTRUSION SENSOR CANNOT BE DISABLED (EXPORT ONLY) 219
*INTRUSION SENSOR FAILS TO TRIP VTSS (EXPORT ONLY) 220
*INTRUSION SENSOR REPEATEDLY TRIGGERS VTSS (EXPORT ONLY) 222
*OPEN DRIVER DOOR FAILS TO TRIP ALARM 223
*OPEN PASSENGER DOOR FAILS TO TRIP ALARM 224
*PARK LAMPS FAIL TO FLASH DURING ALARM 227
*VTSS FAILS TO ARM FROM DRIVER DOOR CYLINDER LOCK SWITCH (EXPORT ONLY) 228
*VTSS FAILS TO ARM/DISARM FROM DRIVER DOOR CYLINDER LOCK SWITCH 228
*VTSS FAILS TO ARM FROM PASSENGER DOOR CYLINDER LOCK SWITCH (EXPORT ONLY) 229
*VTSS INDICATOR FAILS TO FLASH 230
*VTSS INDICATOR STAYS ON STEADY DURING ARMING 231
*VTSS SIREN INOPERATIVE (EXPORT ONLY) 233

VERIFICATION TESTS
VERIFICATION TESTS 235

8.0 COMPONENT LOCATIONS 239

8.1 AIRBAG SYSTEM 239
8.1.1 AIRBAG CONTROL MODULE (ACM) 239
8.1.2 AIRBAG MODULE (DRIVER) 239
8.1.3 AIRBAG MODULE (PASSENGER) 239
8.1.4 CLOCKSPRING 240
8.1.5 SIDE IMPACT AIRBAG CONTROL MODULE (SIACM) 240
8.2 DATA LINK CONNECTOR 240
8.3 FUSE BLOCK 241
8.4 INSTRUMENT CLUSTER 241
8.4.1 BASE CLUSTER 241
8.4.2 PREMIUM CLUSTER 241
8.5 POWER DOOR LOCKS 242
8.5.1 REMOTE KEYLESS ENTRY MODULE 242
8.5.2 DECKLID RELEASE SOLENOID 242
8.5.3 DOOR LOCK MOTOR 243
8.6 VEHICLE COMMUNICATION 243
8.6.1 CONTROLLER ANTILOCK BRAKE MODULE 243
8.6.2 SENTRY KEY IMMOBILIZER MODULE (SKIM) 243
8.7 VEHICLE THEFT SECURITY 244
8.7.1 REMOTE KEYLESS ENTRY MODULE 244
8.7.2 HOOD AJAR SWITCH (EXPORT) 244
8.7.3 DOOR CYLINDER LOCK SWITCH (IF EQUIPPED) 244
8.7.4 DECKLID SECURITY SWITCH 245

9.0 CONNECTOR PINOUTS 247

AIRBAG CONTROL MODULE - YELLOW 23 WAY 247
C208 - YELLOW (SEAT SIDE) 247
C208 - YELLOW (SIDE IMPACT AIRBAG JUMPER SIDE) 247

C209 - YELLOW (SEAT SIDE) 247
C209 - YELLOW (SIDE IMPACT AIRBAG JUMPER SIDE) 248
CLOCKSPRING - GREEN 7 WAY 248
COMPACT DISC CHANGER - BLACK 8 WAY 248
COMPASS/TEMPERATURE MIRROR - BLACK 10 WAY 248
CONTROLLER ANTILOCK BRAKE - BLACK 24 WAY 249
DATA LINK CONNECTOR - WHITE 16 WAY 249
DECKLID RELEASE SWITCH (POWER RELEASE) - BLACK 2 WAY 250
DECKLID SECURITY SWITCH (KNOCK OUT) - GRAY 2 WAY 250
DECKLID SOLENOID - BLACK 2 WAY 250
DOME LAMP/INTRUSION SENSOR (EXPORT) - NATURAL 4 WAY 250
DRIVER AIRBAG SQUIB 1 - YELLOW 2 WAY 251
DRIVER DOOR AJAR SWITCH - BLACK 2 WAY 251
DRIVER DOOR LOCK MOTOR/AJAR SWITCH - BLACK 4 WAY 251
FUEL PUMP MODULE - LT. GRAY 4 WAY 251
HOOD AJAR SWITCH (EXPORT) - BLACK 2 WAY 252
IGNITION SWITCH C1 - BLACK 10 WAY 252
IGNITION SWITCH C2 - WHITE 2 WAY 252
INSTRUMENT CLUSTER - BLACK 26 WAY 253
LEFT CYLINDER LOCK SWITCH (PREMIUM) - BLACK 2 WAY 253
LEFT DOOR LOCK SWITCH - BLACK 3 WAY 254
LEFT FRONT DOOR SPEAKER - 3 WAY 254
LEFT INSTRUMENT PANEL SPEAKER - WHITE 2 WAY 254
LEFT REAR DOOR AJAR SWITCH - BLACK 2 WAY 254
LEFT REAR DOOR LOCK MOTOR/AJAR SWITCH - BLACK 4 WAY 255
LEFT REAR SPEAKER - 3 WAY 255
LEFT SEAT AIRBAG SQUIB - 2 WAY 255
LEFT SIDE IMPACT AIRBAG CONTROL MODULE - 8 WAY 255
MULTI-FUNCTION SWITCH - GRAY 20 WAY 256
PASSENGER AIRBAG SQUIB 1 - YELLOW 2 WAY 256
PASSENGER DOOR AJAR SWITCH - BLACK 2 WAY 257
PASSENGER DOOR LOCK MOTOR/AJAR SWITCH - BLACK 4 WAY 257
HORN RELAY 258
POWERTRAIN CONTROL MODULE C1 - BLACK 38 WAY 259
RADIO C1 - DK. GRAY 22 WAY 260
RADIO C2 (COMPACT DISC CHANGER) - DK. GRAY 10 WAY 260
REMOTE KEYLESS ENTRY MODULE - BLACK 26 WAY 261
RIGHT CYLINDER LOCK SWITCH (EXPORT) - BLACK 2 WAY 261
RIGHT DOOR LOCK SWITCH - BLACK 3 WAY 262
RIGHT FRONT DOOR SPEAKER - 3 WAY 262
RIGHT INSTRUMENT PANEL SPEAKER - WHITE 2 WAY 262
RIGHT REAR DOOR AJAR SWITCH - BLACK 2 WAY 263
RIGHT REAR DOOR LOCK MOTOR/AJAR SWITCH - BLACK 4 WAY 263
RIGHT REAR SPEAKER - 3 WAY 263
RIGHT SEAT AIRBAG SQUIB - 2 WAY 263
RIGHT SIDE IMPACT AIRBAG CONTROL MODULE - 8 WAY 263
SEAT BELT SWITCH - BLACK 2 WAY 264
SENTRY KEY IMMOBILIZER MODULE - BLACK 6 WAY 264
SIREN (EXPORT) - BLACK 4 WAY 264

10.0 SCHEMATIC DIAGRAMS. 265

10.1 AIRBAG SYSTEM 265
10.2 AUDIO SYSTEM 266
10.2.1 CD CHANGER 267
10.3 COMPASS/TEMPERATURE MIRROR. 267
10.4 EXTERIOR LIGHTING 268
10.5 INSTRUMENT CLUSTER 269
10.6 INTERIOR LIGHTING 270
10.7 POWER DOOR LOCKS/RKE 270
10.8 VEHICLE COMMUNICATION 271
10.9 VEHICLE THEFT SECURITY SYSTEM 272

NOTES

1.0 INTRODUCTION

The procedures contained in this manual include all the specifications, instructions and graphics needed to diagnose 2004 body system problems. The diagnostics in this manual are based on the failure condition or symptom being present at the time of diagnosis.

Please follow the recommendations below when choosing your diagnostic path.

1. First make sure the DRBIII® is communicating with the appropriate modules; i.e., if the DRBIII® displays a "No Response" or "Bus +/- signal open" condition, you must diagnose that first.
2. Read DTC's (diagnostic trouble codes) with the DRBIII®.
3. If no DTC's are present, identify the customer complaint.
4. Once the DTC or customer complaint is identified, locate the matching test in the Table of Contents and begin to diagnose the symptom.

All component location views are in Section 8.0. All connector pinouts are in Section 9.0. All schematics are in Section 10.0.

An * placed before the symptom description indicates a customer complaint.

When repairs are required, refer to the appropriate service manual for the proper removal and repair procedure.

Diagnostic procedures change every year. New diagnostic systems may be added and carryover systems may be enhanced. READ THIS MANUAL BEFORE TRYING TO DIAGNOSE A VEHICLE DIAGNOSTIC TROUBLE CODE. It is recommended that you review the entire manual to become familiar with all the new and changed diagnostic procedures.

This book reflects many suggested changes from readers of past issues. After using this book, if you have any comments or suggestions, please fill out the comment form in the back of the book and mail it back to us.

1.1 SYSTEM COVERAGE

This diagnostic procedures manual covers all 2004 PL NEON vehicles.

1.2 SIX-STEP TROUBLESHOOTING PROCEDURE

Diagnosis of the body system is done in six basic steps:

- verification of complaint
- verification of any related symptoms
- symptom analysis
- problem isolation
- repair of isolated problem
- verification of proper operation

2.0 IDENTIFICATION OF SYSTEM

The vehicle systems that are part of the "body" system are:

- Airbag System
- Audio
- Compass/Temperature Mirror
- Instrument Cluster
- Interior Lighting
- Power Door Locks/Remote Keyless Entry
- Vehicle Communications
- Vehicle Theft Security System

3.0 SYSTEM DESCRIPTION AND FUNCTIONAL OPERATION

The body system on the 2004 PL consists of a combination of modules that communicate over the PCI bus (Programmable Communication Interface multiplex system). Through the PCI bus, information about the operation of vehicle components and circuits is relayed quickly to the appropriate module(s). All modules receive all the information transmitted on the bus even though a module may not require all information to perform it's function. It will only respond to messages "addressed" to it through a binary coding process. This method of data transmission significantly reduces the complexity of the wiring in the vehicle and the size of wiring harnesses. All of the information about the functioning of all the systems is organized, controlled, and communicated by the PCI bus, which is described in the Vehicle Communication Section of this general information.

3.1 AIRBAG SYSTEM

The Airbag Control Module (ACM) is bolted to the floor panel transmission tunnel rearward from the gear shift selector inside the vehicle. The ACM mounting bracket is welded to the tunnel and is not serviced with the ACM. The ACM contains a microprocessor, the impact sensor, and energy storage capacitor. The microprocessor contains the airbag system logic. The ACM system logic includes On-Board Diagnostics (OBD) capability, and communicates with the instrument cluster circuitry via the PCI data bus to control the airbag indicator lamp.

The microprocessor in the ACM monitors the impact sensor signal and the airbag system electrical circuits to determine the system readiness. If the ACM detects a monitored system fault, it sends messages to the instrument cluster on the PCI data bus to turn on the airbag indicator lamp. A preprogrammed decision algorithm in the ACM microprocessor determines when the deceleration rate as signaled by the sensor indicates an impact that is severe enough to require airbag system protection. When the programmed conditions are met, the ACM sends an electrical signal to deploy the airbag system components.

The impact sensor is an accelerometer that senses the rate of vehicle deceleration, which provides verification of the direction and severity of an impact. The impact sensor is calibrated for the specific vehicle, and is only serviced as a unit with the ACM.

The ACM also contains an energy-storage capacitor. The purpose of the capacitor is to provide airbag system protection in a severe secondary impact if the initial impact has damaged or disconnected the battery, but was not severe enough to deploy the airbags.

WARNING: THE AIRBAG SYSTEM IS A SENSITIVE, COMPLEX ELECTROMECHANICAL UNIT. BEFORE ATTEMPTING TO DIAGNOSE OR SERVICE ANY AIRBAG SYSTEM OR RELATED STEERING WHEEL, STEERING COLUMN, OR INSTRUMENT PANEL COMPONENTS YOU MUST FIRST DISCONNECT AND ISOLATE THE BATTERY NEGATIVE (GROUND) CABLE. WAIT TWO MINUTES FOR THE SYSTEM CAPACITOR TO DISCHARGE BEFORE FURTHER SYSTEM SERVICE. THIS IS THE ONLY SURE WAY TO DISABLE THE AIRBAG SYSTEM. FAILURE TO DO THIS COULD RESULT IN ACCIDENTAL AIRBAG DEPLOYMENT AND POSSIBLE PERSONAL INJURY OR DEATH.

WARNING: NEVER STRIKE OR KICK THE AIRBAG CONTROL MODULE, AS IT CAN DAMAGE THE IMPACT SENSOR OR AFFECT ITS CALIBRATION. IF AN AIRBAG CONTROL MODULE IS ACCIDENTALLY DROPPED DURING SERVICE, THE MODULE MUST BE SCRAPPED AND REPLACED WITH A NEW UNIT. FAILURE TO TAKE THE PROPER PRECAUTIONS COULD RESULT IN ACCIDENTAL AIRBAG DEPLOYMENT AND PERSONAL INJURY OR DEATH.

The airbag warning lamp is the only point at which the customer can observe “symptoms” of system malfunction. Whenever the ignition key is turned to the “run” or “start” position, the MIC performs a lamp check by turning the airbag warning lamp on for 6-8 seconds. If the lamp turns off, it means that the ACM has checked the system and found it to be free of discernible malfunctions. If the lamp remains on, there could be an active fault in the system or the MIC lamp circuit may be internally shorted to ground. If the lamp comes on and stays on for a period longer than 6-8 seconds then goes off, there is usually an intermittent problem in the system.

The ACM cannot be repaired or adjusted and, if damaged or faulty, it must be replaced.

3.1.1 DRIVER AIRBAG (DAB)

The airbag protective trim cover is the most visible part of the driver side airbag system. The module is mounted directly to the steering wheel. Located under the trim cover are the horn switch, the airbag cushion, and the airbag cushion supporting components. The airbag module includes a housing to which the cushion and inflator are attached and sealed. The airbag module cannot be repaired, and must be replaced if deployed or in any way damaged. The inflator assembly is mounted to the back of the airbag module. The inflator seals the hole in the airbag cushion so it can discharge the gas it produces directly into the cushion when supplied with the proper electrical signal. The protective trim cover is fitted to the front of the airbag module and forms a decorative cover in the center of the steering wheel. Upon airbag deployment, this cover will split at a predetermined breakout line.

WARNING: THE AIRBAG INFLATOR ASSEMBLY CONTAINS SODIUM AZIDE AND POTASSIUM NITRATE. THESE MATERIALS ARE POISONOUS AND EXTREMELY FLAMMABLE. CONTACT WITH ACID, WATER, OR HEAVY METALS MAY PRODUCE HARMFUL AND IRRITATING GASES (SODIUM HYDROXIDE IS FORMED IN THE PRESENCE OF MOISTURE) OR COMBUSTIBLE COMPOUNDS. IN ADDITION, THE PASSENGER AIRBAG MODULE CONTAINS ARGON GAS PRESSURIZED TO OVER 2500 PSI. DO NOT ATTEMPT TO DISMANTLE AN AIRBAG MODULE OR TAMPER WITH ITS INFLATOR. DO NOT PUNCTURE, INCINERATE, OR BRING INTO CONTACT WITH ELECTRICITY. DO NOT STORE AT TEMPERATURE EXCEEDING 93°C (200°F). FAILURE TO TAKE THE PROPER PRECAUTIONS COULD RESULT IN ACCIDENTAL AIRBAG DEPLOYMENT AND PERSONAL INJURY OR DEATH.

3.1.2 CLOCKSPRING

The clockspring is mounted on the steering column behind the steering wheel. This assembly consists of a plastic housing which contains a flat, ribbon-like, electrically conductive tape that winds and unwinds with the steering wheel rotation. The clockspring is used to maintain a continuous electrical circuit between the instrument panel wire harness and the driver side airbag module, the horn switch, and the vehicle speed control switches on vehicles that are so equipped. The clockspring must be properly centered when it is installed on the steering column following any service removal, or it will be damaged. The clockspring cannot be repaired it must be replaced.

3.1.3 PASSENGER AIRBAG (PAB)

The airbag door in the instrument panel top cover above the glove box is the most visible part of the passenger side airbag system. Located under the airbag door is the airbag cushion and its supporting components. The airbag module includes a housing to which the cushion and inflator are attached and sealed. The airbag module cannot be repaired, and must be replaced if deployed or in any way damaged. The inflator assembly is mounted to the back of the airbag module. The inflator includes a small canister of highly compressed argon gas. The inflator seals the hole in the airbag cushion so it can discharge the compressed gas it contains directly into the cushion when supplied with the proper electrical signal. The airbag door has a living hinge at the top, which is secured to the instrument panel top cover. The door also has predetermined breakout lines concealed beneath its decorative cover. Upon airbag deployment, the airbag door will split at the breakout lines and the door will pivot out of the way.

WARNING: THE AIRBAG INFLATOR ASSEMBLY CONTAINS SODIUM AZIDE AND POTASSIUM NITRATE. THESE MATERIALS ARE POISONOUS AND EXTREMELY FLAMMABLE. CONTACT WITH ACID, WATER, OR HEAVY METALS MAY PRODUCE HARMFUL AND IRRITATING GASES (SODIUM HYDROXIDE IS FORMED IN THE PRESENCE OF MOISTURE) OR COMBUSTIBLE COMPOUNDS. IN ADDITION, THE PASSENGER AIRBAG CONTAINS ARGON GAS PRESSURIZED TO OVER 2500 PSI. DO NOT ATTEMPT TO DISMANTLE AN AIRBAG MODULE OR TAMPER WITH ITS INFLATOR. DO NOT PUNCTURE, INCINERATE, OR BRING INTO CONTACT WITH ELECTRICITY. DO NOT STORE AT TEMPERATURE EXCEEDING 93°C (200°F). FAILURE TO TAKE THE PROPER PRECAUTIONS COULD RESULT IN ACCIDENTAL AIRBAG DEPLOYMENT AND PERSONAL INJURY OR DEATH.

WARNING: REPLACE AIRBAG SYSTEM COMPONENTS ONLY WITH PARTS SPECIFIED IN THE CHRYSLER MOPAR PARTS CATALOG. SUBSTITUTE PARTS MAY APPEAR INTERCHANGEABLE, BUT INTERNAL DIFFERENCES MAY RESULT IN INFERIOR OCCUPANT PROTECTION. THE FASTENERS, SCREWS, AND BOLTS ORIGINALLY USED FOR THE AIRBAG SYSTEM COMPONENTS HAVE SPECIAL COATINGS AND ARE SPECIFICALLY DESIGNED FOR THE AIRBAG SYSTEM. THEY MUST NEVER BE REPLACED WITH ANY SUBSTITUTES. ANY TIME A NEW FASTENER IS NEEDED, REPLACE IT WITH THE CORRECT FASTENERS PROVIDED IN THE SERVICE PACKAGE OR SPECIFIED IN THE MOPAR PARTS CATALOG. FAILURE TO TAKE THE PROPER PRECAUTIONS COULD RESULT IN ACCIDENTAL AIRBAG DEPLOYMENT AND PERSONAL INJURY OR DEATH.

3.1.4 SIDE IMPACT AIRBAG CONTROL MODULES (SIACM)

They are located on the left and right B-post. The SIACM perform self diagnostics and circuit tests to determine if the system is functioning properly. If the test finds a problem the SIACM will set both active and stored diagnostic trouble codes. If a DTC is active the SIACM will request that the airbag warning lamp be turned on. The results of the system test are transmitted on the PCI Bus to the ACM once each second or on change in lamp state. If the warning lamp status message from the either SIACM contains a lamp on request the ACM will set an active DTC. At the same time as the DTC is set the ACM sends a PCI Bus message to the mechanical instrument cluster (MIC) requesting the airbag warning lamp be turned on. Observe all ACM warning and caution statements when servicing or handling the SIACM. SIACM are not repairable and must be replaced if they are dropped.

NOTE: When the Airbag Warning Indicator is illuminated, interrogate the ACM.

3.1.5 SEAT AIRBAGS

The Left and Right seat airbag modules are located in the outboard end of the front seat backs. The airbag module contains a bag, an inflator (a small canister of highly compressed argon gas) and

a mounting bracket. The seat airbag module cannot be repaired and must be replaced if deployed or in any way damaged. When supplied with the proper electrical signal the inflator seals the hole in the airbag cushion so it can discharge the compressed gas it contains directly into the cushion. Upon deployment, the seat back trim cover will tear open and allow the seat airbag to fully deploy between the seat and the door.

NOTE: It will be necessary to remove the seat back trim to gain access to the seat airbag module connector when diagnosing the seat airbag system.

WARNING: THE SEAT AIRBAG CONTAINS ARGON GAS PRESSURIZED TO OVER 2500 PSI. DO NOT ATTEMPT TO DISMANTLE AN AIRBAG MODULE OR TAMPER WITH ITS INFLATOR. DO NOT PUNCTURE, INCINERATE, OR BRING INTO CONTACT WITH ELECTRICITY. DO NOT STORE AT TEMPERATURE EXCEEDING 93°C (200°F). REPLACE AIRBAG SYSTEM COMPONENTS ONLY WITH PARTS SPECIFIED IN THE CHRYSLER MOPAR PARTS CATALOG. SUBSTITUTE PARTS MAY APPEAR INTERCHANGEABLE, BUT INTERNAL DIFFERENCES MAY RESULT IN INFERIOR OCCUPANT PROTECTION. THE FASTENERS, SCREWS, AND BOLTS ORIGINALLY USED FOR THE AIRBAG SYSTEM COMPONENTS HAVE SPECIAL COATINGS AND ARE SPECIFICALLY DESIGNED FOR THE AIRBAG SYSTEM. THEY MUST NEVER BE REPLACED WITH ANY SUBSTITUTES. ANY TIME A NEW FASTENER IS NEEDED, REPLACE IT WITH THE CORRECT FASTENERS PROVIDED IN THE SERVICE PACKAGE OR SPECIFIED IN THE CHRYSLER MOPAR PARTS CATALOG. FAILURE TO TAKE THE PROPER PRECAUTIONS COULD RESULT IN ACCIDENTAL AIRBAG DEPLOYMENT AND PERSONAL INJURY OR DEATH.

3.1.6 SPECIAL TOOLS

Some airbag diagnostic tests use special tools, 8310 and 8443 airbag load tool, for testing squib circuits. The load tools contain fixed resistive loads, jumpers and adapters. The fixed loads are connected to cables and mounted in a storage case. The cables can be directly connected to some airbag system connectors. Jumpers are used to convert the load tool cable connectors to the other airbag system connectors. The adapters are connected to the module harness connector to open shorting clips and protect the connector terminal during testing. When using the load tool follow all of the safety procedures in the service information for disconnecting airbag system components. Inspect the wiring, connector and terminals for damage or misalignment. Substitute the airbag load tool in place of a Driver or Passenger Airbag, curtain airbag, clockspring, or seat belt tensioner (use a jumper if needed). Then follow all of the safety procedures in the service information for connecting airbag system components. Read the module active DTC's. If the module reports NO ACTIVE DTC's the defective component has been removed from the system and should be replaced. If the DTC is still active, continue this process until all components in the circuit have been tested. Then disconnect the module connector and connect the matching adapter to the module connector. With all airbags disconnected and the adapter installed the squib wiring can be tested for open and shorted conditions.

3.1.7 DIAGNOSTIC TROUBLE CODES

Airbag diagnostic trouble codes consist of active and stored codes. If more than one code exists, diagnostic priority should be given to the active codes.

Each diagnostic trouble code is diagnosed by following a specific testing procedure. The diagnostic test procedures contain step-by-step instructions for determining the cause of the trouble codes. It is not necessary to perform all of the tests in this book to diagnose an individual code.

Active diagnostic trouble codes for the airbag system are not permanent and will change the moment the reason for the code is corrected. In certain test procedures within this manual, diagnostic trouble codes are used as a diagnostic tool.

3.1.7.1 ACTIVE CODES

The code becomes active as soon as the malfunction is detected or key-off, whichever occurs first. An active trouble code indicates an on-going malfunction. This means that the malfunction is currently there every time the control module checks that circuit/function. It is impossible to erase an active code; active codes automatically erase by themselves when the reason for the code has been corrected.

With the exception of the warning lamp trouble codes or malfunctions, when a malfunction is detected, the airbag lamp remains lit for a minimum of 12 seconds or as long as the malfunction is present.

An "Interrogate Right SIACM or Interrogate left SIACM" diagnostic trouble code indicates an active trouble code in the respective module.

3.1.7.2 STORED CODES

Airbag codes are automatically stored in the ACM's memory as soon as the malfunction is detected. A "stored" code indicates there was an active code present at some time. However, the code currently may not be present as an active code, although another active code could be.

When a trouble code occurs, the airbag warning lamp illuminates for 12 seconds minimum (even if the problem existed for less than 12 seconds). The code is stored, along with the time in minutes it was active, and the number of times the ignition has been cycled since the problem was last detected. The minimum time shown for any code will be one minute, even if the code was actually present for less than one minute, Thus, the time shown for a code that was present for two minutes 13 seconds, for example, would be three minutes.

When and if the malfunction ceases to exist, an ignition cycle count will be initiated for that code. If the ignition cycle count reaches 100 without a reoccurrence of the same malfunction, the diagnostic trouble code is erased and that ignition cycle counter is reset to zero. If the malfunction reoccurs before the count reaches 100, then the ignition cycle counter will be reset and the diagnostic trouble code will continue to be a stored code.

If a malfunction is not active while performing a diagnostic test procedure, the active code diagnostic test will not locate the source of the problem. In this case, the stored code can indicate an area to inspect.

WARNING: TO AVOID PERSONAL INJURY OR DEATH, MAINTAIN A SAFE DISTANCE FROM ALL AIRBAGS WHILE PERFORMING THE FOLLOWING INSPECTION:

If no obvious problems are found:

- Erase the stored codes
- Place the ignition in the Run position
- Wiggle the wire harness and connectors
- Rotate the steering wheel from stop to stop
- Recheck for active codes periodically as you work through the system.

3.2 AUDIO SYSTEM

The audio system on the 2004 PL consists of a radio that communicates over the PCI bus. The speakers are located in the instrument panel, the front doors and the rear "D" pillars. The instrument panel speakers are a tweeter type speaker for high frequency. The front door speakers are a woofer/midrange type speaker. The rear "D" pillar speakers are a full range type speaker. If one of the speaker circuits experiences a short, the other speakers on that output channel will also shut down until the circuit is repaired. The radio will also set a trouble code, which the DRBIII® can display.

The in-dash CD-changer is designed to fit into the existing cubby bin in the center stack. This new cartridge-less CD-changer is controlled by your radio, and allows you to individually load up to four discs at one time. However, due to its compact design, the CD-changer can only carry out one operation at a time. For example you can not load a new disc while playing another at the same time. Each operation happens sequentially.

The radio unit installed with your system provides control over all features of the CD-changer with the exception of the CD load and eject functions, which are controlled by buttons located on the front of the CD-changer. The radio also supplies the power, ground, PCI Bus, left and right speaker output through a single DIN cable. All features you would expect , such as Disc Up/Down, Track Up/Down, Random and Scan are controlled by the radio, which also displays all relevant CD-changer information on the radio display.

The CD-changer contains a Load/Eject button and an indicator light for each of the four disc positions. The individual light indicates whether a CD is currently loaded in that particular chamber of the CD-changer. Pressing the individual Load/Eject button for a particular chamber will eject a disc currently present in the chamber. If the chamber is currently empty, actuating the Load/Eject button will position that chamber to receive and load a new disc in that chamber.

3.3 COMPASS/TEMPERATURE MIRROR

DESCRIPTION

The optional Compass/Temperature Mirror has a vacuum fluorescent (VF) display that is integrated into the rear view mirror. The Compass/Temp Mirror includes the compass/temperature display and two map/reading lamps. This display provides the outside temperature and one of eight compass headings to indicate the direction the vehicle is facing. The Compass/Temp Mirror displays the compass heading and the outside temperature at the same time. The Ambient Temperature Sensor monitors the outside temperature and is hardwired to the PCM. The Compass/Temp Mirror also receives and transmits data on the PCI Bus.

OPERATION

The Compass/Temp Mirror incorporates 2 reading lamp buttons with the STEP button and the Zone/Calibration button features activated by holding a button for a specified time period. The STEP button provides the selections between English and

Metric. The Zone/Cal button provides the selection to change the compass zone or to calibrate the compass. The reading lamp buttons also cycle the reading lamps on or off.

The STEP button (right reading lamp button) operates a momentary contact switch which provides input to the Compass/Temp Mirror in one of the following four modes:

- To toggle the right reading lamp on and off upon release of the button.
- To select degrees in F (Fahrenheit) for the temperature display.
- To select degrees in C (Celsius) for the temperature display.
- To turn off the compass/temperature display.

ENGLISH / METRIC / OFF MODE

With the ignition in the ON position, pressing and holding the STEP button (right reading lamp button) for 5-10 seconds will toggle the display between English and Metric. The Compass/Temp Mirror stores the selected display mode in memory upon releasing the button during the 5-10 seconds.

Pressing and holding the STEP button for 10-15 seconds will turn the display OFF upon releasing the button during the 10-15 seconds.

Each time the temperature mode is changed to F° or C°, the Compass/Temp Mirror stores the new mode in memory. The selected English or Metric mode is recalled after the ignition is cycled. The display OFF mode is not recalled after the ignition is cycled. The Compass/Temp Mirror will power up and display the temperature mode (F° or C°) that was last selected.

CALIBRATION / ZONE MODE

Refer to the Zone Variance Map. With the ignition in the ON position, pressing and holding the Zone/Cal button (left reading lamp button) for 5-10 seconds will illuminate ZONE in the display. Releasing the button while ZONE is illuminated will enter the compass into the Zone Setting mode. The Compass/Temp Mirror will illuminate the Zone Variance number 1 to 15 that is stored in memory. While ZONE is displayed; momentarily pressing the Zone/Cal button advances the zone to the next higher zone. When the desired zone number is displayed, do not press the Zone/Cal button again. After 5 seconds, the Zone Variance number will be stored in the module memory.

With the ignition in the ON position, pressing and holding the Zone/Cal button for 10-15 seconds will toggle the CAL (calibration) mode between on and off. Releasing the button while CAL is displayed enters the compass into the calibration mode. See “First Time Calibration”, “Manual Calibration”, and “Continuous Calibration.”

Pressing and holding the Zone/Cal button for 15-20 seconds and then releasing will exit the CAL mode and toggle the display to the current state of compass/temperature mirror use; OFF, Compass/Temperature F°, or Compass/Temperature C°.

Pressing and holding the Zone/Cal button for 20-25 seconds will enter the CTM into the self-check diagnostic mode upon releasing the button.

Holding the Zone/Cal button for longer than 25 seconds will cause the display to return to its current state with no changes.

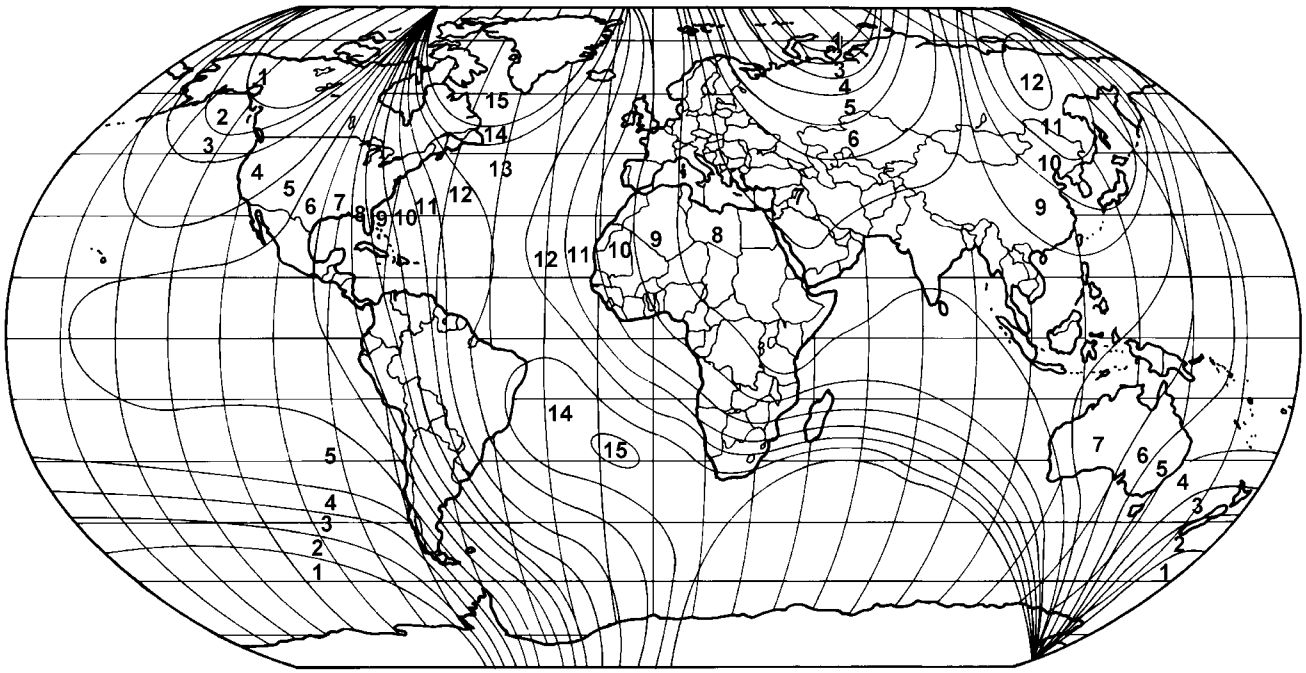

80a13863

SETTING COMPASS ZONE

The compass has a default zone of 8. Refer to the Zone Variance Map to determine the correct zone number. The correct compass Zone selection is critical to proper compass operation. With the ignition in the ON position, pressing the Zone/Cal button (left reading lamp button) for 5-10 seconds and then releasing while ZONE is illuminated enters the compass into the Zone display mode. In the Zone display mode, ZONE will be illuminated instead of the temperature. The current Zone number, 1 through 15 will be displayed. While ZONE is illuminated; momentarily pressing the Zone/Cal button advances the zone to the next higher zone. When the desired zone number is displayed, do not press the Zone/Cal button again. After 5 seconds, the Zone Variance number will be stored in the module memory.

FIRST TIME CALIBRATION

A new Compass/Temp Mirror is shipped in a first time calibration mode. CAL is illuminated when the Compass/Temp Mirror is first powered up. The first time calibration mode can not be exited until the first time calibration process is completed. The CAL icon will remain illuminated to alert the driver that the Compass/Temp Mirror is operating in the CAL mode. Move the vehicle to an area away from large metallic objects or overhead power lines. While CAL is illuminated in the display the vehicle must be driven in 3 complete 360 degree circles at less than 5 MPH (8 KPH). The compass will calibrate; CAL will turn off, and then resume normal operation.

MANUAL CALIBRATION

With the ignition in the ON position, pressing and holding the Zone/Cal button (left reading lamp button) for 10-15 seconds will toggle the display to CAL. Releasing the button within the 10-15 second duration will enter the compass into the calibration mode. CAL will remain illuminated until the calibration is complete or is toggled off by pressing the Zone/Cal button. Move the vehicle to an area away from large metallic objects or overhead power lines. While CAL is illuminated in the display the vehicle must be driven in 3 complete 360 degree circles at less than 5 MPH (8 KPH). The compass will calibrate; CAL will turn off, and then resume normal operation.

CONTINUOUS CALIBRATION

During normal operation, the Compass/Temp Mirror will continuously update the compass calibration to adjust for gradual changes in the vehicle's magnetic remnant field. If the vehicle is subjected to high magnetic influences, the compass may appear to indicate false headings or appear unable to be calibrated. If this occurs the vehicle may need to be demagnetized. Refer to Demagnetizing Procedure in the Service Manual.

SELF- CHECK DIAGNOSTICS

With the ignition ON, the Compass/Temp Mirror can perform a diagnostic self- check by pressing and holding the Zone/Cal button (left reading lamp button) for 20-25 seconds. The internal diagnostics will sequence the following five tests:

1) VF segment display- Illuminates the segment patterns one at a time for 1 second each as follows: CAL; ZONE; N; NE; E; SE; S; SW; W; NW; 0 through 9; C°; F°
2) CTM memory- ROM Checksum
3) CTM memory- RAM
4) CTM memory- EEPROM
5) Compass Test

During the self- check, if any of the internal tests fail, the Compass/Temp Mirror will display an "F" and the number of the test that failed. If more than one test fails "FO" will be displayed. P- Pass or F- Fail will be displayed until the Zone/Cal button (left reading lamp button) is pressed and released or the ignition is cycled. If all of the tests pass, the Compass/Temp Mirror will display "P". A VF segment that fails to illuminate will not cause the Compass/Temp Mirror to display an "F". If any segment fails to illuminate or the Compass/Temp Mirror displays "F", the Compass/Temp Mirror must be replaced.

To exit self- check diagnostics, press and release the Zone/Cal button or cycle the ignition to return to normal compass/temp operation.

OUTSIDE TEMPERATURE

The Compass/Temp Mirror utilizes vehicle speed and engine temperature data received on the PCI Bus to accurately display the outside temperature to avoid "hot soak" condition readings. The displayed outside temperature information is stored within the memory of the compass/temp mirror. When the Compass/Temp Mirror is first powered up, it retrieves the temperature data from the module memory. The memory temperature is compared with the temperature received from the ambient temperature sensor. The colder of the two temperatures is displayed.

TEMPERATURE UPDATE - WARM

On power up, when the outside temperature sensed by the ambient temperature sensor is warmer than the temperature stored in the module memory, the Compass/Temp Mirror will update the displayed temperature in relation to vehicle speed and engine temperature data received on the PCI Bus.

TEMPERATURE UPDATE - COLD

On power up, when the outside air temperature sensed by the ambient temperature sensor is colder than the stored memory temperature, the Compass/Temp Mirror will update the displayed temperature to the outside temperature at a rate of -1°F every 2 seconds, regardless if the vehicle is moving or not.

EXTREME TEMPERATURE / OPEN OR SHORT CONDITION

If the measured outside temperature is more than 60°C (140°F) or the ambient temperature sensor sense circuit is shorted to ground, the temp display will be 60°C (140°F) to indicate a short circuit condition.

If the measured outside temperature is less than -45°C (-49°F) or the ambient temperature sensor sense circuit is open, the temp display will be -45°C (-49°F) to indicate an open circuit condition.

AMBIENT TEMPERATURE SENSOR

DESCRIPTION

The Ambient Temperature Sensor is hardwired to the PCM. The ambient air temperature is monitored and displayed by the Compass/Temp Mirror.

The ambient temperature sensor cannot be adjusted or repaired and, if faulty or damaged, it must be replaced.

OPERATION

The resistance in the ambient temperature sensor changes as the outside temperature rises or falls. The PCM senses the change in reference voltage through the ambient temperature sensor resistor. Based on the resistance of the ambient temperature sensor, the PCM is programmed to correspond to a specific temperature. The Compass/Temp Mirror then displays the proper ambient temperature.

AMBIENT TEMPERATURE SENSOR DIAGNOSTICS

The outside temperature function is supported by the ambient temperature sensor, a signal and ground circuit hardwired to the PCM and the Compass/Temp Mirror display.

If the Compass/Temp Mirror display indicates 60°C (140°F) or the ambient temperature sensor sense circuit is shorted to ground, the temp display will be 60°C (140°F) to indicate a SHORT circuit condition.

If the Compass/Temp Mirror display indicates -45°C (-49°F) or the ambient temperature sensor sense circuit is open, the temp display will be -45°C (-49°F) to indicate an OPEN circuit condition.

If there is an OPEN or SHORT circuit condition, it must be repaired before the Compass/Temp Mirror VF display can be tested.

The ambient temperature sensor can be diagnosed using the following Sensor Test. If there are no codes stored in the PCM and the ambient temperature sensor and the circuits are confirmed to be OK, but the temperature display is inoperative or incorrect, replace the Compass/Temp Mirror.

AMBIENT TEMPERATURE SENSOR TEST

(1) Turn the ignition OFF.

(2) Disconnect and isolate the battery negative cable.

(3) Disconnect the ambient temperature sensor harness connector.

(4) Measure the resistance of the ambient temperature sensor using the following values:

- 0° C (32° F) Sensor Resistance = 29.33 – 35.99 Kilohms
- 10° C (50° F) Sensor Resistance = 17.99 – 21.81 Kilohms
- 20° C (68° F) Sensor Resistance = 11.37 – 13.61 Kilohms
- 25° C (77° F) Sensor Resistance = 9.12 – 10.86 Kilohms
- 30° C (86° F) Sensor Resistance = 7.37 – 8.75 Kilohms
- 40° C (104° F) Sensor Resistance = 4.90 – 5.75 Kilohms

The sensor resistance should read between these min/max values. If the resistance value is OK, refer to the Wiring Diagrams to test the Signal and Ground circuits. If the resistance values are not OK, replace the Sensor.

3.4 EXTERIOR LIGHTING

The Headlamps are controlled by the Instrument Cluster. The Instrument Cluster is also referred to as a “Smart Cluster”. It receives and sends messages to other modules through the PCI BUS circuit. The Headlamps are wired through the cluster and then go to the Fuse Block to the lamps. Each Headlamp has an independent fuse located in the Fuse Block. For vehicles equipped with Daytime Running Lamps, the DRL Module is integrated with the Instrument Cluster.

3.5 ELECTRO/MECHANICAL INSTRUMENT CLUSTER (EMIC)

There are 4 (four) different types of Instrument Clusters. Base, Premium, Luxury, and AutoStick. The Premium cluster is equipped with a tachometer and a low fuel indicator. The Luxury has the same features as the Premium with an additional black overlay and chrome rings. The AutoStick is the

Luxury cluster with the AutoStick function. The PCM controls the vacuum fluorescent (VF) PRND or AutoStick display. The cluster will illuminate the appropriate PRND or gear position based on PCI Bus data received from the PCM.

The Instrument Cluster Speedometer, Tachometer, and Engine Coolant Temperature gauges are positioned using PCI Bus messages received from the PCM. The Fuel gauge is a hard wired input from the Fuel Level Sensor in the Fuel Pump Module.

The Cluster also contains warning indicators that are illuminated by hard wired inputs or by messages received from other modules on the PCI Bus.

The Trip/Total Odometer is a Vacuum Fluorescent (VF) display that is controlled by PCI Bus messages received from the PCM. The VF display also displays the “Door”, “Cruise”, and “Trac” messages. If the Instrument Cluster experiences a loss of PCI Bus communication with other modules on the Bus, the Cluster will display “nobuS” in the VF display.

The illumination lamps are hard wired in the Instrument Cluster. When the Park or Headlamps are turned on, the Cluster receives a hard wire input from the Multi-Function Switch. The Cluster sends a Panel Lamps Dimmer Signal to ground through the Multi-Function Switch. The varying voltage drop is sensed by the Instrument Panel Drivers to create a corresponding amount of illumination dimming. This dimming level is then sent out from the Cluster to other components.

The Cluster will communicate with the DRBIII® to display PCI Engine Info, PCI Bus info, and certain inputs/outputs. The Cluster is also capable of performing a diagnostic Self-Test that is actuated by depressing and holding the Odometer trip reset stalk while cycling the ignition from the off to the on position. The Cluster will position all of the gauges at specified calibration points and will illuminate all the PCI Bus controlled indicators. The Cluster will also illuminate each segment of the VF display.

If the Cluster does not detect voltage on the Courtesy Lamp circuit, the message “FUSE” will alternate with the odometer/trip odometer for 30 (thirty) seconds after the ignition is turned on and for 15 (fifteen) seconds after the vehicle is first moved.

3.6 INTERIOR LIGHTING

The Courtesy Lamps are controlled by the instrument cluster. Some of the features that it controls are the courtesy lamps, chime, and all instrument illumination. It receives and sends messages to other modules via the PCI bus circuit. The front turn signals are wired through the cluster and then go to the front lamps. For vehicles equipped with Daytime Running Lamps, the DRL module is built into the cluster.

3.7 REMOTE KEYLESS ENTRY MODULE

The Remote Keyless Entry module controls the Power Door Locks and the Vehicle Theft Security System (VTSS). It also wakes up the Instrument Cluster to turn on the illuminated entry when it senses a signal from the RKE transmitter. The module communicates with other modules via the PCI bus circuit.

The RKE module monitors the Occupant Restraint Controller messages for the purpose of monitoring the deployment of the airbag. Upon receiving that message along with the verification that the ignition is on and the vehicle speed is zero, it will provide the “enhanced accident response feature”. This feature will cause the module to unlock-all doors immediately and the instrument cluster to turn the courtesy lamps on when the vehicle reaches 0 MPH.

The RKE module communicates with the Powertrain Control Module to receive vehicle speed information to activate the rolling door lock feature, receive the “okay to lock” message, and receive body style information. Two transmitters are supplied with the vehicle but a total of 4 can be programmed to the module. The horn chirp on vehicle lock command is customer programmable.

To limit the amount of battery drain during storage, the IOD fuse may be removed.

3.7.1 VEHICLE THEFT SECURITY SYSTEM

When the VTSS is armed, it will monitor the ignition switch status, ajar switches for the vehicle doors and decklid. Also monitored is a decklid security switch (knockout) for the cylinder lock. If the alarm is tripped, it will sound the vehicles horn, flash the exterior lamps and the VTSS indicator located in the instrument cluster.

Arming the system is accomplished by locking the doors with the door lock switch following a normal exit sequence of opening the door pressing the power lock button and closing the door, by using the driver door cylinder lock switch or by pressing the RKE lock button. After all the doors are closed, the VTSS indicator will flash quickly for sixteen-seconds indicating the pre-arm process, after which it will flash at a slower rate indicating the system is armed. If during the pre-arm process a door is opened, the ignition is turned to the Run/Start position or if the RKE module receives an unlock request the system will automatically be disarmed. If the VTSS indicator stays on steady during pre-arm, it is an indication of an open decklid security switch sense circuit.

Disarming can be accomplished with a RKE unlock, turning the ignition on with a valid Sentry key or unlocking the vehicle with the driver door cylinder lock. All of the switches for the VTSS system can be monitored using the DRBIII®. The DRBIII® is also useful to determine the cause of a customer complaint of the alarm going off with no apparent reason.

3.7.2 VEHICLE THEFT SECURITY SYSTEM (EXPORT ONLY)

When the VTSS is armed, it will monitor the interior of the vehicle for movement via an intrusion sensor (if equipped), the ignition switch status, ajar switches for the vehicle doors, decklid and hood. Vehicles without an intrusion sensor will have a decklid security switch (knockout) which will also be monitored. If the alarm is tripped, it will sound the vehicles horn or a battery backed siren for vehicles equipped with the intrusion sensor, flash the exterior lamps and the VTSS indicator located in the instrument cluster.

Arming the system is accomplished by locking the doors with the door lock switch following a normal exit sequence of opening the door pressing the power lock button and closing the door, or by using either door cylinder lock switch or by pressing the RKE lock button. After all the doors are closed, the VTSS indicator will flash quickly for sixteen-seconds indicating the pre-arm process, after which it will flash at a slower rate indicating the system is armed. If during the pre-arm process a door is opened, the ignition is turned to the Run/Start position or if the RKE module receives an unlock request the system will automatically be disarmed. If the VTSS indicator stays on steady during pre-arm, it is an indication of the hood ajar circuit being shorted (hood opened) or the decklid security switch circuit being open (if equipped). Defeating the intrusion sensor feature for vehicles so equipped can be done by three additional lock request to the RKE module within 5 seconds.

Disarming is done by either a RKE unlock or turning the ignition on with a valid Sentry key. All of the switches for the VTSS system can be monitored using the DRBIII®. The DRBIII® is also useful to determine the cause of a customer complaint of the alarm going off with no apparent reason.

3.7.3 POWER DOOR LOCKS

3.7.3.1 CENTRAL LOCKING (W/VTSS ONLY)

This feature allows the customer to lock/unlock all vehicle doors with the key from the front door cylinder lock switch. The customer can choose to program this feature to unlock all doors with one turn of the key or open the driver door only with the first turn of the key and open the other doors with the second turn. Altering the operation of the unlock function via the key cylinder switch from one turn to two turns will also alter the operation of the RKE transmitter from one press to two presses.

3.7.3.2 ROLLING (AUTOMATIC) DOOR LOCKS

All vehicle doors are locked automatically once the vehicle reaches a speed of 15 mph and all doors are closed. This feature can be also be enabled/disabled by the customer.

3.7.3.3 DOOR LOCK INHIBIT

This feature disables the door lock command from the interior door lock switch whenever the driver door is open and the key is in the ignition. This prevents the driver from locking the keys in the ignition when using the power door locks. This feature is inoperable if the IOD fuse is not installed.

3.7.3.4 POWER DECKLID RELEASE

Electrically releases the decklid upon two presses of the RKE transmitter decklid release button. This feature is disabled once the speed of the vehicle is greater than 5 mph. The decklid can also be released from the switch in the glove box.

3.7.3.5 PANIC MODE (IF EQUIPPED)

Upon activation of the panic function, the headlamps and park lamps flash in an alternating manner, the horn pulses every second and the courtesy lamps are turned on. The panic mode allows normal nightime driving by allowing the headlamps and park lamps to be on steady when the headlamp switch is in the on position. Panic mode is activated immediately by pressing the panic button once. It does not disarm the VTSS or unlock the doors. It is canceled by pressing the button a second time, reaching a vehicle speed greater than 15 mph or after 3 minutes has elapsed in panic mode. Once panic mode has been activated there is a 2-second delay before it will turn off. Once it is cancelled there is a 2-second delay before it can be reactivated. This is to avoid the problem of deactivating and immediate reactivating due to multiple button presses.

3.8 VEHICLE COMMUNICATION

The Programmable Communication Interface or PCI Bus is a single wire multiplexed network capable of supporting binary encoded messages shared between multiple modules. The PCI bus circuit is

identified as D25. The modules are wired in parallel. Connections are made in the harness using splices. The following modules are used on the PL:

- Airbag Control Module
- Left Side Impact Airbag Control Module
- Right Side Impact Airbag Control Module
- Controller Antilock Brake
- Powertrain Control Module
- Radio (If equipped)
- CD Changer (If equipped)
- Compass/Temperature Mirror (If equipped)
- Remote Keyless Entry Module (If equipped)
- Sentry Key Immobilizer Module (If equipped)
- Mechanical Instrument Cluster

Each module provides its own bias and termination in order to transmit and receive messages. The bus voltage is at zero volts when no modules are transmitting and is pulled up to about seven and a half volts when modules are transmitting.

The bus messages are transmitted at a rate averaging 10800 bits per second. Since there is only voltage present when the modules transmit and the message length is only about 500 milliseconds, it is ineffective to try and measure the bus activity with a conventional voltmeter. The preferred method is to use the DRBIII® lab scope. The 12v square wave selection on the 20-volt scale provides a good view of the bus activity. Voltage on the bus should pulse between zero and about seven and a half volts. Refer to the following figure for some typical displays.

The PCI Bus failure modes are broken down into two categories. Complete PCI Bus Communication Failure and individual module no response. Causes of a complete PCI Bus Communication Failure include a short to ground or battery on the PCI circuit. Individual module no response can be caused by an open circuit at the module, or an open battery or ground circuit to the affected module.

Symptoms of a complete PCI Bus Communication Failure would include but are not limited to:

- All gauges on the EMIC stay at zero
- All telltales on EMIC illuminate
- EMIC backlighting at full intensity
- No response received from any module on the PCI bus (except PCM)
- No start (if equipped with Sentry Key Immobilizer)

Symptoms of Individual module failure could include any one or more of the above. The difference would be that at least one or more modules would respond to the DRBIII®.

Diagnosis starts with symptom identification. If a complete PCI Bus Communication Failure is suspected, begin by identifying which modules the vehicle is equipped with and then attempt to get a response from the modules with the DRBIII®. If any modules are responding, the failure is not related to the total bus, but can be caused by one or more modules PCI circuit or power supply and ground circuits. The DRBIII® may display “BUS +/- SIGNALS OPEN” OR “NO RESPONSE” to indicate a communication problem. These same messages will be displayed if the vehicle is not equipped with that particular module. The CCD error message is a default message used by the DRBIII® and in no way indicates whether or not the PCI bus is operational. The message is only an indication that a module is either not responding or the vehicle is not equipped.

NOTE: For 2004 model year, some vehicles will integrate the Transmission Control Module and Powertrain Control Module into a single control module. This new module is the Next Generation Controller for DaimlerChrysler and will be referred to as the Powertrain Control Module (PCM). The Transmission Control Module is part of the Powertrain Control Module.

Diagnostic procedures and DTC numbers are some of the changes you will see which reflect the new combined module technology. The PCM will have four color coded connectors C1 through C4, (C1-BLK, C2-ORANGE, C3-WHITE, C4-GREEN), each PCM connector will have 38 pins each. Two new tools are used for probing and repairing the New PCM connectors. A New tool to release the pins from the PCM connectors Miller #3638 is introduced, you must use the Miller tool #3638 to release the connector pins or harness and connector damage will occur. Also a New tool for probing connectors Miller #8815 is introduced, you must use the Miller tool #8815 to probe the PCM pins or harness and connector damage will occur. There is also a new Verification test and module replacment procedure for the PCM.

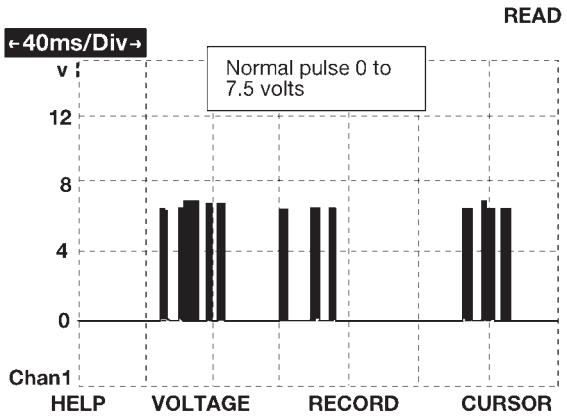

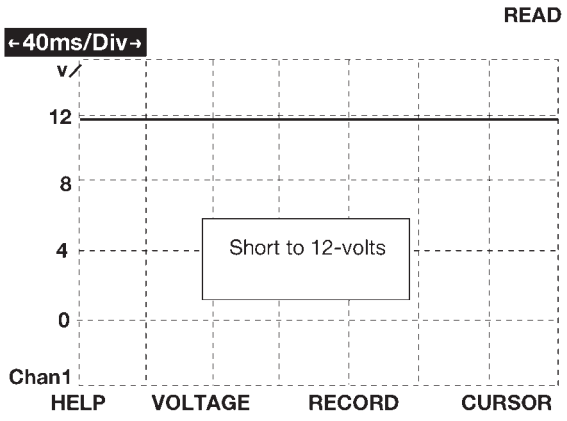

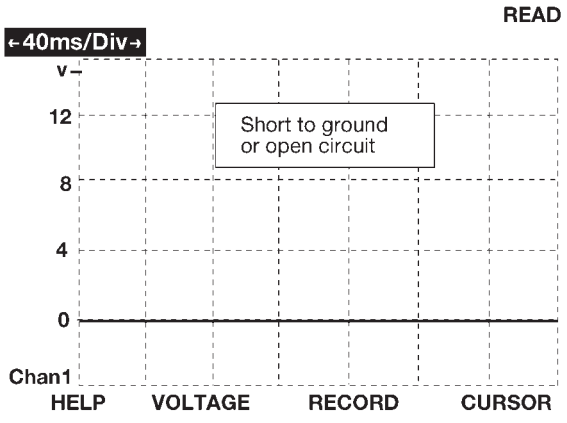

80bdbcf6

3.9 USING THE DRBIII®

Refer to the DRBIII® user's guide for instructions and assistance with reading trouble codes, erasing trouble codes and other DRBIII® functions.

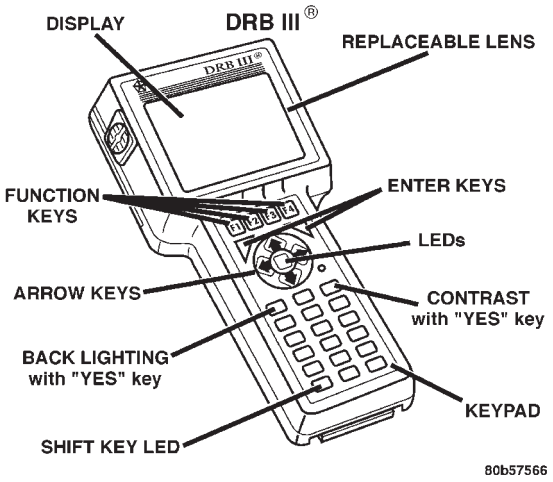

3.9.1 DRBIII® ERROR MESSAGES AND BLANK SCREEN

Under normal operation, the DRBIII® will display one of only two error messages:

– User-Requested WARM Boot or User-Requested COLD Boot

If the DRBIII® should display any other error message, record the entire display and call the Star Center for information and assistance. This is a sample of such an error message display:

```
ver: 2.14
date: 26 Jul93
file: key_itf.cc
date: Jul 26 1993
line: 548
err: 0x1
User-Requested COLD Boot

Press MORE to switch between this display
  and the application screen.
Press F4 when done noting information.
```

3.9.2 DRBIII® DOES NOT POWER UP

If the LED's do not light or no sound is emitted at start up, check for loose cable connections or a bad cable. Check the vehicle battery voltage (data link connector cavity 16). A minimum of 11 volts is required to adequately power the DRBIII®.

If all connections are proper between the DRBIII® and the vehicle or other devices, and the vehicle battery is fully charged, and inoperative DRBIII® may be the result of faulty cable or vehicle wiring.

3.9.3 DISPLAY IS NOT VISIBLE

Low temperatures will affect the visibility of the display. Adjust the contrast to compensate for this condition.

4.0 DISCLAIMERS, SAFETY, WARNINGS

4.1 DISCLAIMERS

All information, illustrations, and specifications contained in this manual are based on the latest information available at the time of publication. The right is reserved to make changes at any time without notice.

4.2 SAFETY

4.2.1 TECHNICIAN SAFETY INFORMATION

WARNING! WHEN OPERATING, ENGINES PRODUCE AN ODORLESS GAS CALLED CARBON MONOXIDE. INHALING CARBON MONOXIDE GAS CAN RESULT IN SLOWER REACTION TIMES AND CAN LEAD TO PERSONAL INJURY OR DEATH. WHEN THE ENGINE IS OPERATING, KEEP SERVICE AREAS WELL VENTILATED OR ATTACH THE VEHICLE EXHAUST SYSTEM TO THE SHOP EXHAUST REMOVAL SYSTEM.

Set the parking brake and block the wheels before testing or repairing the vehicle. It is especially important to block the wheels on front-wheel drive vehicles; the parking brake does not hold the drive wheels.

When servicing a vehicle, always wear eye protection, and remove any metal jewelry such as rings, watchbands or bracelets that might make an inadvertent electrical contact.

When diagnosing a body system problem, it is important to follow approved procedures where applicable. These procedures can be found in this General Information Section or in service manual procedures. Following these procedures is very important to the safety of individuals performing diagnostic tests.

4.2.2 VEHICLE PREPARATION FOR TESTING

Make sure the vehicle being tested has a fully charged battery. If it does not, false diagnostic codes or error messages may occur.

4.2.3 SERVICING SUB-ASSEMBLIES

Some components of the body system are intended to be serviced as an assembly only. Attempting to remove or repair certain system subcomponents may result in personal injury and/or improper system operation. Only those components with approved repair and installation procedures in the service manual should be serviced.

4.2.4 DRBIII® SAFETY INFORMATION

WARNING: EXCEEDING THE LIMITS OF THE DRBIII® MULTIMETER IS DANGEROUS. READ ALL DRBIII® INSTRUCTIONS BEFORE USING THE MULTIMETER. FAILURE TO FOLLOW THESE INSTRUCTIONS CAN RESULT IN PERSONAL INJURY OR DEATH.

- Follow the vehicle manufacturer's service specifications at all times.
- Do not use the DRBIII® if it has been damaged.
- Do not use the test leads if the insulation is damaged or if metal is exposed.
- To avoid electrical shock, do not touch the test leads, tips, or the circuit being tested.
- Choose the proper range and function for the measurement. Do not try voltage or current measurements that may exceed the rated capacity.
- Do not exceed the limits shown in the table below:

FUNCTION	INPUT LIMIT
Volts	0 - 500 peak volts AC 0 - 500 volts DC
Ohms (resistance)*	0 - 1.12 megohms
Frequency Measured Frequency Generated	0 - 10 kHz
Temperature	-58 - 1100°F -50 - 600°C

* Ohms cannot be measured if voltage is present. Ohms can be measured only in a non-powered circuit.

- Voltage between any terminal and ground must not exceed 500v DC or 500v peak AC.
- Use caution when measuring voltage above 25v DC or 25v AC.
- Use the low current shunt to measure circuits up to 10A. Use the high current clamp to measure circuits exceeding 10A.
- When testing for the presence of voltage or current, make sure the meter is functioning correctly. Take a reading of a known voltage or current before accepting a zero reading.
- When measuring current, connect the meter in series with test lead.
- Disconnect the live test lead before disconnecting the common test lead.

- When using the meter function, keep the DRBIII® away from spark plug or coil wires to avoid measuring error from outside interference.

4.3 WARNINGS

4.3.1 VEHICLE DAMAGE WARNINGS

Before disconnecting any control module, make sure the ignition is "off". Failure to do so could damage the module.

When testing voltage or continuity at any control module, use the terminal side (not the wire end) of the connector. Do not probe a wire through the insulation, this will damage it and eventually cause it to fail because of corrosion. Be careful when performing electrical tests so as to prevent accidental shorting of terminals. Such mistakes can damage fuses or components. Also, a second code could be set, making diagnosis of the original problem more difficult.

4.3.2 ROAD TESTING A COMPLAINT VEHICLE

Some complaints will require a test drive as part of the repair verification procedure. The purpose of the test drive is to try to duplicate the diagnostic code or symptom condition.

WARNING: REASSEMBLE ALL COMPONENTS BEFORE ROAD TESTING A VEHICLE. DO NOT TRY TO READ THE DRBIII® SCREEN OR OTHER TEST EQUIPMENT DURING A TEST DRIVE. DO NOT HANG THE DRBIII® OR OTHER TEST EQUIPMENT FROM THE REARVIEW MIRROR DURING A TEST DRIVE. HAVE AN ASSISTANT AVAILABLE TO OPERATE THE DRBIII® OR OTHER TEST EQUIPMENT. FAILURE TO FOLLOW THESE INSTRUCTIONS CAN RESULT IN PERSONAL INJURY OR DEATH.

5.0 REQUIRED TOOLS AND EQUIPMENT

DRBIII® (diagnostic read-out box)
Jumper Wires
Ohmmeter
Voltmeter
Test Light
8310 Airbag Load Tool
8443 SRS Airbag System Load Tool

6.0 GLOSSARY OF ACRONYMS

ABS	antilock brake system
ACM	airbag control module
AECM	airbag electronic control module (ACM)
ASDM	airbag system diagnostic module (ACM)
BUX	built-up export
CAB	controller antilock brake
CTM	compass/temperature mirror
DAB	driver airbag
DLC	data link connector
DTC	diagnostic trouble code
EMIC	electro/mechanical instrument cluster
LSIACM	left SIACM
NGC	next generation controller
PAB	passenger airbag
PCI	Programmable Communication Interface (vehicle communication bus)
PCM	powertrain control module
PDC	power distribution center
PWM	pulse width modulated
RKE	remote keyless entry
RSIACM	right SIACM
SAB	side airbag
SIACM	side impact airbag control module
SKIM	sentry key immobilizer module
SKIS	sentry key immobilizer system
SQUIB	also called initiator (located in rear of airbag module)
TCM	transmission control module
VFD	vacuum fluorescent display
VTSS	vehicle theft security system

7.0

DIAGNOSTIC INFORMATION AND PROCEDURES

Symptom List:

ACCELEROMETER 1
ACCELEROMETER 2
INTERNAL 1
OUTPUT DRIVER 1
OUTPUT DRIVER 2
SAFING SENSOR
STORED ENERGY FIRING 1
STORED ENERGY LOGIC

Test Note: All symptoms listed above are diagnosed using the same tests. The title for the tests will be ACCELEROMETER 1.

When Monitored and Set Condition:

ACCELEROMETER 1

When Monitored: With the ignition on, the module on board diagnostics continuously performs internal circuit tests.

Set Condition: This DTC will set if the module identifies an out of range internal circuit.

ACCELEROMETER 2

When Monitored: With the ignition on, the module on board diagnostics continuously performs internal circuit tests.

Set Condition: This DTC will set if the module identifies an out of range internal circuit.

INTERNAL 1

When Monitored: With the ignition on, the module on board diagnostics continuously performs internal circuit tests.

Set Condition: This DTC will set if the module identifies an out of range internal circuit.

OUTPUT DRIVER 1

When Monitored: With the ignition on the module on board diagnostics continuously performs internal circuit tests.

Set Condition: This DTC will set if the module identifies an out of range internal circuit.

OUTPUT DRIVER 2

When Monitored: With the ignition on the module on board diagnostics continuously performs internal circuit tests.

Set Condition: This DTC will set if the module identifies an out of range internal circuit.

ACCELEROMETER 1 — Continued

SAFING SENSOR

When Monitored: When the ignition on, the module on board diagnostics continuously performs internal circuit tests.

Set Condition: This DTC will set if the module identifies an out of range safing sensor.

STORED ENERGY FIRING 1

When Monitored: With the ignition on the ACM on board diagnostics continuously performs internal circuit tests.

Set Condition: This DTC will set if the ACM identifies an out of range internal circuit.

STORED ENERGY LOGIC

When Monitored: With the ignition on the ACM on board diagnostics continuously performs internal circuit tests.

Set Condition: This DTC will set if the ACM identifies an out of range internal circuit.

POSSIBLE CAUSES
AIRBAG CONTROL MODULE - ACM
LEFT SIDE IMPACT AIRBAG CONTROL MODULE - LSIACM
RIGHT SIDE IMPACT AIRBAG CONTROL MODULE - RSIACM

ACCELEROMETER 1 — Continued

TEST	ACTION	APPLICABILITY
1	Turn the ignition on. Ensure the battery is fully charged. **WARNING: IF THE MODULE IS DROPPED AT ANY TIME, IT MUST BE REPLACED. FAILURE TO TAKE THE PROPER PRECAUTIONS COULD RESULT IN ACCIDENTAL AIRBAG DEPLOYMENT AND PERSONAL INJURY OR DEATH.** **NOTE: For the purpose of this test, the AECM and ORC modules will be referred to as an ACM.** From the list below, select the appropriate module reporting this diagnostic trouble code. SELECT ONE: ACM - ACTIVE or STORED DTC Replace the Airbag Control Module in accordance with Service Instructions. Perform AIRBAG VERIFICATION TEST - VER 1. LEFT SIACM - ACTIVE or STORED DTC WARNING: MAKE SURE THE BATTERY IS DISCONNECTED, THEN WAIT TWO MINUTES BEFORE PROCEEDING. Replace the Left Side Impact Airbag Control Module in accordance with Service Instructions. Perform AIRBAG VERIFICATION TEST - VER 1. RIGHT SIACM - ACTIVE or STORED DTC WARNING: MAKE SURE THE BATTERY IS DISCONNECTED, THEN WAIT TWO MINUTES BEFORE PROCEEDING. Replace the Right Side Impact Airbag Control Module in accordance with Service information. Perform AIRBAG VERIFICATION TEST - VER 1. **NOTE: When reconnecting Airbag system components, the ignition must be turned off and the battery must be disconnected.**	All

Symptom List:

AIRBAG WARNING INDICATOR OPEN
AIRBAG WARNING INDICATOR SHORT

Test Note: All symptoms listed above are diagnosed using the same tests. The title for the tests will be AIRBAG WARNING INDICATOR OPEN.

When Monitored and Set Condition:

AIRBAG WARNING INDICATOR OPEN

When Monitored: With ignition on the ACM monitors the PCI Bus for a message from the MIC containing the airbag warning indicator status. The MIC transmits the message one time at ignition on, upon lamp state change, or in response to the ACM lamp message.

Set Condition: This DTC will set if the indicator status is OPEN for 2 or 3 consecutive messages or 2 or 3 seconds.

AIRBAG WARNING INDICATOR SHORT

When Monitored: With ignition on the ACM monitors the PCI Bus for a message from the MIC containing the airbag warning indicator status. The MIC transmits the message one time at ignition on, upon lamp state change, or in response to the ACM lamp message.

Set Condition: This DTC will set if the indicator status is SHORT for 2 or 3 consecutive messages or 2 or 3 seconds.

POSSIBLE CAUSES
MIC, COMMUNICATION FAILURE
WARNING INDICATOR
ACM, WARNING INDICATOR
STORED CODE OR INTERMITTENT CONDITION
ACTIVE CODE PRESENT

TEST	ACTION	APPLICABILITY
1	Turn the ignition on. Ensure the battery is fully charged. **NOTE: For the purpose of this test, the AECM and ORC modules will be referred to as an ACM.** SELECT ACTIVE or STORED DTC: ACM - ACTIVE DTC Go To 2 ACM - STORED DTC Go To 5 **NOTE: When reconnecting Airbag system components, the ignition must be turned off and the battery must be disconnected.**	All

AIRBAG WARNING INDICATOR OPEN — Continued

TEST	ACTION	APPLICABILITY
2	With the DRBIII®, ensure PCI Bus communications with the Instrument Cluster. Is the Instrument Cluster communicating on the PCI Bus? Yes → Go To 3 No → Refer to category COMMUNICATION CATEGORY and select the related symptom INSTRUMENT CLUSTER BUS +/- SIGNAL OPEN.	All
3	With the DRBIII® select PASSIVE RESTRAINTS, AIRBAG and MONITOR DISPLAY. Using the DRBIII®, read the WARNING LAMP MONITOR screen. Select the LAMP STATUS displayed on the DRB monitors screen. Does the DRBIII® show the LAMP STATUS: OK? YES Go To 4 NO Replace Instrument Cluster. Perform BODY VERIFICATION TEST - VER 1.	All
4	**WARNING: TO AVOID PERSONAL INJURY OR DEATH, TURN THE IGNITION OFF, DISCONNECT THE BATTERY AND WAIT TWO MINUTES BEFORE PROCEEDING.** **WARNING: IF THE AIRBAG CONTROL MODULE IS DROPPED AT ANY TIME, IT MUST BE REPLACED. FAILURE TO TAKE THE PROPER PRECAUTIONS COULD RESULT IN ACCIDENTAL AIRBAG DEPLOYMENT AND PERSONAL INJURY OR DEATH.** If there are no possible causes remaining, view repair. Repair Replace the Airbag Control Module in accordance with Service Instructions. Perform AIRBAG VERIFICATION TEST - VER 1.	All
5	**NOTE: Ensure the battery is fully charged.** With the DRBIII®, record and erase all DTCs from all modules. All active codes must be resolved before diagnosing any stored codes. Maintain a safe distance from all airbags while performing the following steps. With the DRBIII® monitor active codes as you work through the system. **NOTE: If equipped with Passenger Airbag On-Off switch, read the DTC's in all switch positions.** Wiggle the wiring harness and connectors of the appropriate airbag system and rotate the steering wheel from stop to stop. **NOTE: Check connectors - Clean and repair as necessary.** You have just attempted to simulate the condition that initially set the trouble code message. The following additional checks may assist you in identifying a possible intermittent problem: - Visually inspect related wire harness connectors. Look for broken, bent, pushed out, spread, corroded, or contaminated terminals. - Visually inspect the related harnesses. Look for chafed, pierced, pinched or partially broken wire. - Refer to Wiring Diagrams and Technical Service Bulletins that may apply. Did the DTC become active ? Yes → Select appropriate symptom from Symptom List. No → No problem found at this time. Erase all codes before returning vehicle to customer.	All

Symptom:
CLUSTER MESSAGE MISMATCH

When Monitored and Set Condition:

CLUSTER MESSAGE MISMATCH

When Monitored: After the MIC bulb test is completed, the ACM compares the Lamp Request by ACM, On or Off, and the Lamp on by MIC, On or Off, PCI Bus messages. Each message is transmitted one time per second or when a change in the lamp state occur.

Set Condition: If the Lamp Request by ACM, On or Off, and the Lamp on by MIC, On or Off, messages do not match, the code will set.

POSSIBLE CAUSES
MIC DIAGNOSTIC CODES
CLUSTER MESSAGE MISMATCH
STORED CODE OR INTERMITTENT CONDITION
ACM, CLUSTER MESSAGE MISMATCH
ACTIVE CODE PRESENT

TEST	ACTION	APPLICABILITY
1	Turn the ignition on. Ensure the battery is fully charged. **NOTE: For the purpose of this test, the AECM and ORC modules will be referred to as an ACM.** SELECT ACTIVE or STORED DTC: ACM - ACTIVE DTC Go To 2 ACM - STORED DTC Go To 5 **NOTE: When reconnecting Airbag system components, the ignition must be turned off and the battery must be disconnected.**	All
2	Turn the ignition on. With the DRBIII®, read the MIC DTCs. Does the DRBIII® display any active Diagnostic Codes? Yes → Refer to symptom list for problems related to Instrument Cluster. No → Go To 3	All

CLUSTER MESSAGE MISMATCH — Continued

TEST	ACTION	APPLICABILITY
3	With the DRBIII® select PASSIVE RESTRAINTS, AIRBAG, MONITOR DISPLAY and WARNING LAMP STATUS. Cycle the ignition key and observe the LAMP ON BY MIC and LAMP REQ BY ACM monitors after the 6 to 8 second indicator test. Does the LAMP ON BY MIC and LAMP REQ BY ACM monitors match? YES Go To 4 NO Replace Mechanical Instrument Cluster. Perform BODY VERIFICATION TEST - VER 1.	All
4	**WARNING: TO AVOID PERSONAL INJURY OR DEATH, MAKE SURE THE BATTERY IS DISCONNECTED, THEN WAIT TWO MINUTES BEFORE PROCEEDING.** **WARNING: IF THE AIRBAG CONTROL MODULE IS DROPPED AT ANY TIME, IT MUST BE REPLACED. FAILURE TO TAKE THE PROPER PRECAUTIONS COULD RESULT IN ACCIDENTAL AIRBAG DEPLOYMENT AND PERSONAL INJURY OR DEATH.** If there are no possible causes remaining, view repair. Repair Replace the Airbag Control Module in accordance with Service Instructions. Perform AIRBAG VERIFICATION TEST - VER 1.	All
5	**NOTE: Ensure the battery is fully charged.** With the DRBIII®, record and erase all DTCs from all modules. All active codes must be resolved before diagnosing any stored codes. Maintain a safe distance from all airbags while performing the following steps. With the DRBIII® monitor active codes as you work through the system. **NOTE: If equipped with Passenger Airbag On-Off switch, read the DTC's in all switch positions.** Wiggle the wiring harness and connectors of the appropriate airbag system and rotate the steering wheel from stop to stop. **NOTE: Check connectors - Clean and repair as necessary.** You have just attempted to simulate the condition that initially set the trouble code message. The following additional checks may assist you in identifying a possible intermittent problem: - Visually inspect related wire harness connectors. Look for broken, bent, pushed out, spread, corroded, or contaminated terminals. - Visually inspect the related harnesses. Look for chafed, pierced, pinched or partially broken wire. - Refer to Wiring Diagrams and Technical Service Bulletins that may apply. Did the DTC become active ? Yes → Select appropriate symptom from Symptom List. No → No problem found at this time. Erase all codes before returning vehicle to customer.	All

Symptom:
CONFIGURATION ERROR

When Monitored and Set Condition:

CONFIGURATION ERROR

When Monitored: With ignition on the Side Impact Airbag Control Module monitors the unused squib terminals for the a valid squib circuit resistance.

Set Condition: When the SIACM detects a valid squib circuit resistance across the unused terminals.

POSSIBLE CAUSES
SELECT MODULE REPORTING DTC
MISS WIRED LEFT SIACM CONNECTOR
MISS WIRED RIGHT SIACM CONNECTOR
LEFT SIDE IMPACT AIRBAG CONTROL MODULE - LSIACM
RIGHT SIDE IMPACT AIRBAG CONTROL MODULE - LSIACM
STORED CODE OR INTERMITTENT CONDITION
ACTIVE CODE PRESENT

TEST	ACTION	APPLICABILITY
1	Turn the ignition on. **NOTE: Ensure that the battery is fully charged.** **NOTE: For the purpose of this test, the AECM and ORC modules will be referred to as an ACM.** SELECT ONE: LEFT SIACM - ACTIVE DTC Go To 2 LEFT SIACM - STORED DTC Go To 4 RIGHT SIACM - ACTIVE DTC Go To 3 RIGHT SIACM - STORED DTC Go To 4 **NOTE: When reconnecting Airbag system components, the ignition must be turned off and the battery must be disconnected.**	All

CONFIGURATION ERROR — Continued

TEST	ACTION	APPLICABILITY
2	**WARNING: TURN IGNITION OFF, DISCONNECT THE BATTERY AND WAIT TWO MINUTES BEFORE PROCEEDING.** Disconnect the Left SIACM connector. **NOTE: Check connectors - Clean and repair as necessary.** Using the wiring diagram/schematic as a guide, inspect the Left SIACM connector wiring. Is the connector correctly wired? Yes → Replace the Left Side Impact Airbag Control Module in accordance with Service Instructions. WARNING: IF THE SIDE IMPACT AIRBAG CONTROL MODULE IS DROPPED AT ANY TIME, IT MUST BE REPLACED. Perform AIRBAG VERIFICATION TEST - VER 1. No → Rewire the Left Side Impact Airbag Control Module connector. Perform AIRBAG VERIFICATION TEST - VER 1.	All
3	**WARNING: TURN IGNITION OFF, DISCONNECT THE BATTERY AND WAIT TWO MINUTES BEFORE PROCEEDING.** Disconnect the Right SIACM connector. **NOTE: Check connectors - Clean and repair as necessary.** Using the wiring diagram/schematic as a guide, inspect the Right SIACM connector wiring. Is the connector correctly wired? Yes → Replace the Right Side Impact Airbag Control Module in accordance with Service Instructions. WARNING: IF THE SIDE IMPACT AIRBAG CONTROL MODULE IS DROPPED AT ANY TIME, IT MUST BE REPLACED. Perform AIRBAG VERIFICATION TEST - VER 1. No → Rewire the Right Side Impact Airbag Control Module connector. Perform AIRBAG VERIFICATION TEST - VER 1.	All
4	**NOTE: Ensure the battery is fully charged.** With the DRBIII®, record and erase all DTCs from all modules. All active codes must be resolved before diagnosing any stored codes. Maintain a safe distance from all airbags while performing the following steps. With the DRBIII® monitor active codes as you work through the system. **NOTE: If equipped with Passenger Airbag On-Off switch, read the DTC's in all switch positions.** Wiggle the wiring harness and connectors of the appropriate airbag system and rotate the steering wheel from stop to stop. **NOTE: Check connectors - Clean and repair as necessary.** You have just attempted to simulate the condition that initially set the trouble code message. The following additional checks may assist you in identifying a possible intermittent problem: - Visually inspect related wire harness connectors. Look for broken, bent, pushed out, spread, corroded, or contaminated terminals. - Visually inspect the related harnesses. Look for chafed, pierced, pinched or partially broken wire. - Refer to Wiring Diagrams and Technical Service Bulletins that may apply. Did the DTC become active ? Yes → Select appropriate symptom from Symptom List. No → No problem found at this time. Erase all codes before returning vehicle to customer.	All

Symptom:
DRIVER SQUIB 1 CIRCUIT OPEN

When Monitored and Set Condition:

DRIVER SQUIB 1 CIRCUIT OPEN

When Monitored: With the ignition on the ACM monitors the resistance of the Driver Squib 1 circuits.

Set Condition: The ACM detects an open circuit or high resistance in the Driver Squib 1 circuits.

POSSIBLE CAUSES
DRIVER AIRBAG OPEN
CLOCKSPRING SQUIB CIRCUITS OPEN
DRIVER SQUIB 1 LINE 1 OR LINE 2 CIRCUIT OPEN
ACM, DRIVER SQUIB 1 CIRCUIT OPEN
STORED CODE OR INTERMITTENT CONDITION
ACTIVE CODE PRESENT

TEST	ACTION	APPLICABILITY
1	Turn the ignition on. **NOTE: Ensure that the battery is fully charged.** **NOTE: For the purpose of this test, the AECM and ORC modules will be referred to as an ACM.** SELECT ACTIVE or STORED DTC: ACM - ACTIVE DTC Go To 2 ACM - STORED DTC Go To 6 **NOTE: When reconnecting Airbag system components, the ignition must be turned off and the battery must be disconnected.**	All

DRIVER SQUIB 1 CIRCUIT OPEN — Continued

TEST	ACTION	APPLICABILITY
2	**WARNING: TO AVOID PERSONAL INJURY OR DEATH, TURN THE IGNITION OFF, DISCONNECT THE BATTERY AND WAIT TWO MINUTES BEFORE PROCEEDING.** **WARNING: DO NOT PLACE AN INTACT UNDEPLOYED AIRBAG FACE DOWN ON A HARD SURFACE, THE AIRBAG WILL PROPEL INTO THE AIR IF ACCIDENTALLY DEPLOYED. FAILURETO TAKE THE PROPER PRECAUTIONS COULD RESULT IN ACCIDENTAL AIRBAG DEPLOYMENT AND PERSONAL INJURY OR DEATH.** Disconnect the Driver Airbag. **NOTE: Check connectors - Clean and repair as necessary.** Connect the appropriate Load Tool to the Driver Airbag connectors. **WARNING: TO AVOID PERSONAL INJURY OR DEATH, TURN THE IGNITION ON, THEN RECONNECT THE BATTERY.** With the DRBIII®, read the active Airbag DTCs. Does the DRBIII® show DRIVER SQUIB 1 CIRCUIT OPEN? Yes → Go To 3 No → Replace the Driver Airbag in accordance with the Service Information. Perform AIRBAG VERIFICATION TEST - VER 1.	All
3	**WARNING: TO AVOID PERSONAL INJURY OR DEATH, TURN THE IGNITION OFF, DISCONNECT THE BATTERY AND WAIT TWO MINUTES BEFORE PROCEEDING.** Disconnect the Clockspring connector. **NOTE: Check connectors - Clean and repair as necessary.** Connect the appropriate Load Tool to the Clockspring connector. **WARNING: TO AVOID PERSONAL INJURY OR DEATH,TURN THE IGNITION ON, THEN RECONNECT THE BATTERY.** With the DRBIII®, read the active Airbag DTCs. Does the DRBIII® show DRIVER SQUIB 1 CIRCUIT OPEN? Yes → Go To 4 No → Replace the Clockspring in accordance with the Service Information. Perform AIRBAG VERIFICATION TEST - VER 1.	All
4	**WARNING: TO AVOID PERSONAL INJURY OR DEATH, TURN THE IGNITION OFF, DISCONNECT THE BATTERY AND WAIT TWO MINUTES BEFORE PROCEEDING.** Disconnect the Airbag Control Module connector. **NOTE: Check connectors - Clean and repair as necessary.** Connect the appropriate Load Tool adaptor to the Airbag Control Module connector. Disconnect the Load Tool from the Clockspring connector. Measure the resistance of the Driver Squib 1 Line 1 and Line 2 circuit between the ACM adaptor and the Clockspring connector. Is the resistance below 1.0 ohms on both circuits? Yes → Go To 5 No → Repair open or high resistance in the Driver Squib 1 Line 1 or Line 2 circuit. Perform AIRBAG VERIFICATION TEST - VER 1.	All

DRIVER SQUIB 1 CIRCUIT OPEN — Continued

TEST	ACTION	APPLICABILITY
5	**WARNING: TO AVOID PERSONAL INJURY OR DEATH, TURN THE IGNITION OFF, DISCONNECT THE BATTERY AND WAIT TWO MINUTES BEFORE PROCEEDING.** **WARNING: IF THE AIRBAG CONTROL MODULE IS DROPPED AT ANY TIME, IT MUST BE REPLACED. FAILURE TO TAKE THE PROPER PRECAUTIONS COULD RESULT IN ACCIDENTAL AIRBAG DEPLOYMENT AND PERSONAL INJURY OR DEATH.** If there are no possible causes remaining, view repair. Repair Replace the Airbag Control Module in accordance with Service Instructions. Perform AIRBAG VERIFICATION TEST - VER 1.	All
6	**NOTE: Ensure the battery is fully charged.** With the DRBIII®, record and erase all DTCs from all modules. All active codes must be resolved before diagnosing any stored codes. Maintain a safe distance from all airbags while performing the following steps. With the DRBIII® monitor active codes as you work through the system. **NOTE: If equipped with Passenger Airbag On-Off switch, read the DTC's in all switch positions.** Wiggle the wiring harness and connectors of the appropriate airbag system and rotate the steering wheel from stop to stop. **NOTE: Check connectors - Clean and repair as necessary.** You have just attempted to simulate the condition that initially set the trouble code message. The following additional checks may assist you in identifying a possible intermittent problem: - Visually inspect related wire harness connectors. Look for broken, bent, pushed out, spread, corroded, or contaminated terminals. - Visually inspect the related harnesses. Look for chafed, pierced, pinched or partially broken wire. - Refer to Wiring Diagrams and Technical Service Bulletins that may apply. Did the DTC become active ? Yes → Select appropriate symptom from Symptom List. No → No problem found at this time. Erase all codes before returning vehicle to customer.	All

Symptom:
DRIVER SQUIB 1 CIRCUIT SHORT

When Monitored and Set Condition:

DRIVER SQUIB 1 CIRCUIT SHORT

When Monitored: With the ignition on the ACM monitors the resistance of the Driver Squib 1 circuits.

Set Condition: The ACM has detected low resistance on the Driver Squib 1 circuits.

POSSIBLE CAUSES
DRIVER AIRBAG CIRCUIT SHORT
CLOCKSPRING, DRIVER SQUIB 1 CIRCUIT SHORT
DRIVER SQUIB 1 LINE 1 SHORT TO LINE 2
ACM, DRIVER SQUIB 1 CIRCUIT SHORT
STORED CODE OR INTERMITTENT CONDITION
ACTIVE CODE PRESENT

TEST	ACTION	APPLICABILITY
1	Turn the ignition on. **NOTE: Ensure that the battery is fully charged.** **NOTE: For the purpose of this test, the AECM and ORC modules will be referred to as an ACM.** SELECT ACTIVE or STORED DTC: ACM - ACTIVE DTC Go To 2 ACM - STORED DTC Go To 6 **NOTE: When reconnecting airbag system components the Ignition must be turned off and the Battery must be disconnected.**	All

DRIVER SQUIB 1 CIRCUIT SHORT — Continued

TEST	ACTION	APPLICABILITY
2	**WARNING: TO AVOID PERSONAL INJURY OR DEATH, TURN THE IGNITION OFF, DISCONNECT THE BATTERY AND WAIT TWO MINUTES BEFORE PROCEEDING.** Disconnect the Driver Airbag. **WARNING: DO NOT PLACE AN INTACT UNDEPLOYED AIRBAG FACE DOWN ON A HARD SURFACE, THE AIRBAG WILL PROPEL INTO THE AIR IF ACCIDENTALLY DEPLOYED. FAILURE TO TAKE THE PROPER PRECAUTIONS COULD RESULT IN ACCIDENTAL AIRBAG DEPLOYMENT AND PERSONAL INJURY OR DEATH.** **NOTE: Check connectors - Clean and repair as necessary.** Connect the appropriate Load Tool to the Driver Airbag connectors. **WARNING: TO AVOID PERSONAL INJURY OR DEATH,TURN THE IGNITION ON, THEN RECONNECT THE BATTERY.** With the DRBIII®, read the active Airbag DTCs. Does the DRBIII® show DRIVER SQUIB 1 CIRCUIT SHORT? Yes → Go To 3 No → Replace Driver Airbag. Perform AIRBAG VERIFICATION TEST - VER 1.	All
3	**WARNING: TO AVOID PERSONAL INJURY OR DEATH, TURN THE IGNITION OFF, DISCONNECT THE BATTERY AND WAIT TWO MINUTES BEFORE PROCEEDING.** Disconnect the Clockspring connector. **NOTE: Check connectors - Clean and repair as necessary.** Connect the appropriate Load Tool to the Clockspring connector. **WARNING: TO AVOID PERSONAL INJURY OR DEATH, TURN THE IGNITION ON, THEN RECONNECT THE BATTERY.** With the DRBIII®, read the active Airbag DTCs. Does the DRBIII® show DRIVER SQUIB 1 CIRCUIT SHORT? Yes → Go To 4 No → Replace Clockspring. Perform AIRBAG VERIFICATION TEST - VER 1.	All
4	**WARNING: TO AVOID PERSONAL INJURY OR DEATH, TURN THE IGNITION OFF, DISCONNECT THE BATTERY AND WAIT TWO MINUTES BEFORE PROCEEDING.** Disconnect the Airbag Control Module connector. **NOTE: Check connectors - Clean and repair as necessary.** Connect the appropriate Load Tool adaptor to the Airbag Control Module connector. Disconnect the Load Tool from the Clockspring connector. Measure the resistance between the Driver Squib 1 Line 1 and Line 2 at the Clockspring connector. Is the resistance below 10K ohms? Yes → Repair the Driver Squib 1 Line 1 circuit shorted to Driver Squib 1 Line 2 circuit. Perform AIRBAG VERIFICATION TEST - VER 1. No → Go To 5	All

DRIVER SQUIB 1 CIRCUIT SHORT — Continued

TEST	ACTION	APPLICABILITY
5	**WARNING: TO AVOID PERSONAL INJURY OR DEATH, TURN THE IGNITION OFF, DISCONNECT THE BATTERY AND WAIT TWO MINUTES BEFORE PROCEEDING.** **WARNING: IF THE AIRBAG CONTROL MODULE IS DROPPED AT ANY TIME, IT MUST BE REPLACED. FAILURE TO TAKE THE PROPER PRECAUTIONS COULD RESULT IN ACCIDENTAL AIRBAG DEPLOYMENT AND PERSONAL INJURY OR DEATH.** If there are no possible causes remaining, view repair. Repair Replace the Airbag Control Module in accordance with Service Instructions. Perform AIRBAG VERIFICATION TEST - VER 1.	All
6	**NOTE: Ensure the battery is fully charged.** With the DRBIII®, record and erase all DTCs from all modules. All active codes must be resolved before diagnosing any stored codes. Maintain a safe distance from all airbags while performing the following steps. With the DRBIII® monitor active codes as you work through the system. **NOTE: If equipped with Passenger Airbag On-Off switch, read the DTC's in all switch positions.** Wiggle the wiring harness and connectors of the appropriate airbag system and rotate the steering wheel from stop to stop. **NOTE: Check connectors - Clean and repair as necessary.** You have just attempted to simulate the condition that initially set the trouble code message. The following additional checks may assist you in identifying a possible intermittent problem: - Visually inspect related wire harness connectors. Look for broken, bent, pushed out, spread, corroded, or contaminated terminals. - Visually inspect the related harnesses. Look for chafed, pierced, pinched or partially broken wire. - Refer to Wiring Diagrams and Technical Service Bulletins that may apply. Did the DTC become active ? Yes → Select appropriate symptom from Symptom List. No → No problem found at this time. Erase all codes before returning vehicle to customer.	All

Symptom:
DRIVER SQUIB 1 SHORT TO BATTERY

When Monitored and Set Condition:

DRIVER SQUIB 1 SHORT TO BATTERY

When Monitored: With the ignition on the ACM monitors the voltage of the Driver Squib 1 circuits.

Set Condition: The ACM has detected high voltage on the Driver Squib 1 circuits.

POSSIBLE CAUSES
DRIVER AIRBAG CIRCUIT SHORT TO BATTERY
CLOCKSPRING, DRIVER SQUIB 1 CIRCUIT SHORT TO BATTERY
DRIVER SQUIB 1 LINE 1 OR LINE 2 SHORT TO BATTERY
ACM, DRIVER SQUIB 1 CIRCUITS SHORT TO BATTERY
STORED CODE OR INTERMITTENT CONDITION
ACTIVE CODE PRESENT

TEST	ACTION	APPLICABILITY
1	Turn the ignition on. **NOTE: Ensure that the battery is fully charged.** **NOTE: For the purpose of this test, the AECM and ORC modules will be referred to as an ACM.** SELECT ACTIVE or STORED ACM DTC: ACM - ACTIVE DTC Go To 2 ACM - STORED DTC Go To 6 **NOTE: When reconnecting Airbag system components, the ignition must be turned off and the battery must be disconnected.**	All

DRIVER SQUIB 1 SHORT TO BATTERY — Continued

TEST	ACTION	APPLICABILITY
2	**WARNING: TO AVOID PERSONAL INJURY OR DEATH, TURN THE IGNITION OFF, DISCONNECT THE BATTERY AND WAIT TWO MINUTES BEFORE PROCEEDING.** **WARNING: DO NOT PLACE AN INTACT UNDEPLOYED AIRBAG FACE DOWN ON A HARD SURFACE, THE AIRBAG WILL PROPEL INTO THE AIR IF ACCIDENTALLY DEPLOYED, AND COULD RESULT IN SERIOUS OR FATAL INJURY.** Disconnect the Driver Airbag. **NOTE: Check connectors - Clean and repair as necessary.** Connect the appropriate Load Tool to the Driver Airbag connectors. **WARNING: TO AVOID PERSONAL INJURY OR DEATH, TURN THE IGNITION ON, THEN RECONNECT THE BATTERY.** With the DRBIII®, read the active Airbag DTCS. Does the DRBIII® show DRIVER SQUIB 1 SHORT TO BATTERY? Yes → Go To 3 No → Replace the Driver Airbag in accordance with the Service Information. Perform AIRBAG VERIFICATION TEST - VER 1.	All
3	**WARNING: TO AVOID PERSONAL INJURY OR DEATH, TURN THE IGNITION OFF, DISCONNECT THE BATTERY AND WAIT TWO MINUTES BEFORE PROCEEDING.** Disconnect the Clockspring connector. **NOTE: Check connectors - Clean and repair as necessary.** Connect the appropriate Load Tool to the Clockspring connector. **WARNING: TO AVOID PERSONAL INJURY OR DEATH, TURN THE IGNITION ON, THEN RECONNECT THE BATTERY.** With the DRBIII®, read the active Airbag DTCs. Does the DRBIII® show DRIVER SQUIB 1 SHORT TO BATTERY ? Yes → Go To 4 No → Replace the Clockspring in accordance with the Service Information. Perform AIRBAG VERIFICATION TEST - VER 1.	All
4	**WARNING: TO AVOID PERSONAL INJURY OR DEATH, TURN THE IGNITION OFF, DISCONNECT THE BATTERY AND WAIT TWO MINUTES BEFORE PROCEEDING.** **WARNING: IF THE AIRBAG CONTROL MODULE IS DROPPED AT ANY TIME, IT MUST BE REPLACED. FAILURE TO TAKE THE PROPER PRECAUTIONS COULD RESULT IN ACCIDENTAL AIRBAG DEPLOYMENT AND PERSONAL INJURY OR DEATH.** Disconnect the Airbag Control Module connector. **NOTE: Check connectors - Clean and repair as necessary.** Connect the appropriate Load Tool adaptor to the Airbag Control Module connector. **WARNING: TO AVOID PERSONAL INJURY OR DEATH, TURN THE IGNITION ON, THEN RECONNECT THE BATTERY.** Disconnect the Load Tool from the Clockspring connector. Measure the voltage on the Driver Squib 1 Line 1 and Line 2 circuits between the Clockspring connector and ground. Is there any voltage present? Yes → Repair the Driver Squib 1 Line 1 or Line 2 circuits shorted to battery. Perform AIRBAG VERIFICATION TEST - VER 1. No → Go To 5	All

DRIVER SQUIB 1 SHORT TO BATTERY — Continued

TEST	ACTION	APPLICABILITY
5	**WARNING: TO AVOID PERSONAL INJURY OR DEATH, TURN THE IGNITION OFF, DISCONNECT THE BATTERY AND WAIT TWO MINUTES BEFORE PROCEEDING.** **WARNING: IF THE AIRBAG CONTROL MODULE IS DROPPED AT ANY TIME, IT MUST BE REPLACED. FAILURE TO TAKE THE PROPER PRECAUTIONS COULD RESULT IN ACCIDENTAL AIRBAG DEPLOYMENT AND PERSONAL INJURY OR DEATH.** If there are no possible causes remaining, view repair. Repair Replace the Airbag Control Module in accordance with Service Instructions. Perform AIRBAG VERIFICATION TEST - VER 1.	All
6	**NOTE: Ensure the battery is fully charged.** With the DRBIII®, record and erase all DTCs from all modules. All active codes must be resolved before diagnosing any stored codes. Maintain a safe distance from all airbags while performing the following steps. With the DRBIII® monitor active codes as you work through the system. **NOTE: If equipped with Passenger Airbag On-Off switch, read the DTC's in all switch positions.** Wiggle the wiring harness and connectors of the appropriate airbag system and rotate the steering wheel from stop to stop. **NOTE: Check connectors - Clean and repair as necessary.** You have just attempted to simulate the condition that initially set the trouble code message. The following additional checks may assist you in identifying a possible intermittent problem: - Visually inspect related wire harness connectors. Look for broken, bent, pushed out, spread, corroded, or contaminated terminals. - Visually inspect the related harnesses. Look for chafed, pierced, pinched or partially broken wire. - Refer to Wiring Diagrams and Technical Service Bulletins that may apply. Did the DTC become active ? Yes → Select appropriate symptom from Symptom List. No → No problem found at this time. Erase all codes before returning vehicle to customer.	All

Symptom:
DRIVER SQUIB 1 SHORT TO GROUND

When Monitored and Set Condition:

DRIVER SQUIB 1 SHORT TO GROUND

When Monitored: With the ignition on the ACM monitors the resistance of the Driver Squib 1 circuits.

Set Condition: The ACM has detected a short to ground in the Driver Squib 1 circuits.

POSSIBLE CAUSES
DRIVER AIRBAG CIRCUIT SHORT TO GROUND
CLOCKSPRING, DRIVER SQUIB 1 CIRCUIT SHORT TO GROUND
DRIVER SQUIB 1 LINE 1 OR LINE 2 SHORTED TO GROUND
ACM, DRIVER SQUIB 1 CIRCUITS SHORT TO GROUND
STORED CODE OR INTERMITTENT CONDITION
ACTIVE CODE PRESENT

TEST	ACTION	APPLICABILITY
1	Turn the ignition on. **NOTE: Ensure that the battery is fully charged.** **NOTE: For the purpose of this test, the AECM and ORC modules will be referred to as an ACM.** SELECT ACTIVE or STORED DTC: ACM - ACTIVE DTC Go To 2 ACM - STORED DTC Go To 5 **NOTE: When reconnecting Airbag system components, the ignition must be turned off and the battery must be disconnected.**	All

DRIVER SQUIB 1 SHORT TO GROUND — Continued

TEST	ACTION	APPLICABILITY
2	**WARNING: TO AVOID PERSONAL INJURY OR DEATH, TURN THE IGNITION OFF, DISCONNECT THE BATTERY AND WAIT TWO MINUTES BEFORE PROCEEDING.** **WARNING: DO NOT PLACE AN INTACT UNDEPLOYED AIRBAG FACE DOWN ON A HARD SURFACE, THE AIRBAG WILL PROPEL INTO THE AIR IF ACCIDENTALLY DEPLOYED. FAILURE TO TAKE THE PROPER PRECAUTIONS COULD RESULT IN ACCIDENTAL AIRBAG DEPLOYMENT AND PERSONAL INJURY OR DEATH.** Disconnect the Driver Airbag Module. **NOTE: Check connectors - Clean and repair as necessary.** Connect the appropriate Load Tool to the Driver Airbag connectors. **WARNING: TO AVOID PERSONAL INJURY OR DEATH, TURN THE IGNITION ON, THEN RECONNECT THE BATTERY.** With the DRBIII®, read the active Airbag DTCs. Does the DRBIII® show DRIVER SQUIB 1 SHORT TO GROUND? Yes → Go To 3 No → Replace the Driver Airbag in accordance with the Service Information. Perform AIRBAG VERIFICATION TEST - VER 1.	All
3	**WARNING: TO AVOID PERSONAL INJURY OR DEATH, TURN THE IGNITION OFF, DISCONNECT THE BATTERY AND WAIT TWO MINUTES BEFORE PROCEEDING.** Disconnect the Clockspring connector. **NOTE: Check connectors - Clean and repair as necessary.** Connect the appropriate Load Tool to the Clockspring connector. **WARNING: TO AVOID PERSONAL INJURY OR DEATH, TURN THE IGNITION ON, THEN RECONNECT THE BATTERY.** With the DRBIII®, read the active Airbag DTCs. Does the DRBIII® show DRIVER SQUIB 1 SHORT TO GROUND? Yes → Go To 4 No → Replace the Clockspring. Perform AIRBAG VERIFICATION TEST - VER 1.	All
4	**WARNING: TO AVOID PERSONAL INJURY OR DEATH, TURN THE IGNITION OFF, DISCONNECT THE BATTERY AND WAIT TWO MINUTES BEFORE PROCEEDING.** Disconnect the Airbag Control Module connector. **NOTE: Check connectors - Clean and repair as necessary.** Connect the appropriate Load Tool adaptor to the Airbag Control Module connector. Disconnect the Load Tool from the Clockspring connector. Measure the resistance of the Driver Squib 1 Line 1 and Line 2 circuits between Clockspring connector and ground. Is the resistance below 10K ohms on either circuit? Yes → Repair Driver Squib 1 Line 1 or Line 2 circuits shorted to ground. Perform AIRBAG VERIFICATION TEST - VER 1. No → Replace the Airbag Control Module in accordance with Service Instructions. Perform AIRBAG VERIFICATION TEST - VER 1.	All

DRIVER SQUIB 1 SHORT TO GROUND — Continued

TEST	ACTION	APPLICABILITY
5	**NOTE: Ensure the battery is fully charged.** With the DRBIII®, record and erase all DTCs from all modules. All active codes must be resolved before diagnosing any stored codes. Maintain a safe distance from all airbags while performing the following steps. With the DRBIII® monitor active codes as you work through the system. **NOTE: If equipped with Passenger Airbag On-Off switch, read the DTC's in all switch positions.** Wiggle the wiring harness and connectors of the appropriate airbag system and rotate the steering wheel from stop to stop. **NOTE: Check connectors - Clean and repair as necessary.** You have just attempted to simulate the condition that initially set the trouble code message. The following additional checks may assist you in identifying a possible intermittent problem: - Visually inspect related wire harness connectors. Look for broken, bent, pushed out, spread, corroded, or contaminated terminals. - Visually inspect the related harnesses. Look for chafed, pierced, pinched or partially broken wire. - Refer to Wiring Diagrams and Technical Service Bulletins that may apply. Did the DTC become active ? Yes → Select appropriate symptom from Symptom List. No → No problem found at this time. Erase all codes before returning vehicle to customer.	All

Symptom:
INTERROGATE LEFT SIACM

When Monitored and Set Condition:

INTERROGATE LEFT SIACM

When Monitored: With ignition on, the ACM monitors the PCI Bus for a Left SIACM status message containing the airbag warning lamp ″On or OFF″ request. The status message is sent to the ACM once each second or upon any change in the active DTCs.

Set Condition: The Code will set, if the ACM receives an Lamp On status message from the Left SIACM. NOTE: This indicates that there was an active diagnostic trouble code in the Left SIACM.

POSSIBLE CAUSES
INTERROGATE LEFT SIACM
ACM, NO ACTIVE LEFT SIACM DTCS
STORED CODE OR INTERMITTENT CONDITION
ACTIVE CODE PRESENT

TEST	ACTION	APPLICABILITY
1	**NOTE: Ensure that the battery is fully charged.** Ensure the battery is fully charged. **NOTE: For the purpose of this test, the AECM and ORC modules will be referred to as an ACM.** SELECT ACTIVE or STORED DTC: ACM - ACTIVE DTC Go To 2 ACM - STORED DTC Go To 4 **NOTE: When reconnecting Airbag system components, the ignition must be turned off and the battery must be disconnected.**	All
2	Turn the ignition on. With the DRBIII® read the Left SIACM active DTCs. Did the DRBIII® show any active DTCs? Yes → Refer to symptom list for problems related to Left SIACM. Perform AIRBAG VERIFICATION TEST - VER 1. No → Go To 3	All

INTERROGATE LEFT SIACM — Continued

TEST	ACTION	APPLICABILITY
3	**WARNING: TURN THE IGNITION OFF, DISCONNECT THE BATTERY AND WAIT TWO MINUTES BEFORE PROCEEDING.** If there are no possible causes remaining, view repair. Repair Replace the Airbag Control Module in accordance with Service Instructions. WARNING: IF THE AIRBAG CONTROL MODULE IS DROPPED AT ANY TIME, IT MUST BE REPLACED. Perform AIRBAG VERIFICATION TEST - VER 1.	All
4	**NOTE: Ensure the battery is fully charged.** With the DRBIII®, record and erase all DTCs from all modules. All active codes must be resolved before diagnosing any stored codes. Maintain a safe distance from all airbags while performing the following steps. With the DRBIII® monitor active codes as you work through the system. **NOTE: If equipped with Passenger Airbag On-Off switch, read the DTC's in all switch positions.** Wiggle the wiring harness and connectors of the appropriate airbag system and rotate the steering wheel from stop to stop. **NOTE: Check connectors - Clean and repair as necessary.** You have just attempted to simulate the condition that initially set the trouble code message. The following additional checks may assist you in identifying a possible intermittent problem: - Visually inspect related wire harness connectors. Look for broken, bent, pushed out, spread, corroded, or contaminated terminals. - Visually inspect the related harnesses. Look for chafed, pierced, pinched or partially broken wire. - Refer to Wiring Diagrams and Technical Service Bulletins that may apply. Did the DTC become active ? Yes → Select appropriate symptom from Symptom List. No → No problem found at this time. Erase all codes before returning vehicle to customer.	All

Symptom:
INTERROGATE RIGHT SIACM

When Monitored and Set Condition:

INTERROGATE RIGHT SIACM

When Monitored: With ignition on, the ACM monitors the PCI Bus for a Right SIACM status message containing the airbag warning indicator On - OFF request. The status message is sent to the ACM once each second or upon any change in the active DTCs.

Set Condition: The Code will set, if the ACM receives an Lamp On status message from the Right SIACM. NOTE: This indicates that there is an active diagnostic trouble code in the Right SIACM.

POSSIBLE CAUSES
INTERROGATE RIGHT SIACM
NO ACTIVE RIGHT SIACM DTCS
STORED CODE OR INTERMITTENT CONDITION
ACTIVE CODE PRESENT

TEST	ACTION	APPLICABILITY
1	**NOTE: Ensure that the battery is fully charged.** Ensure the battery is fully charged. **NOTE: For the purpose of this test, the AECM and ORC modules will be referred to as an ACM.** SELECT ACTIVE or STORED DTC: ACM - ACTIVE DTC Go To 2 ACM - STORED DTC Go To 4 **NOTE: When reconnecting Airbag system components, the ignition must be turned off and the battery must be disconnected.**	All
2	Turn the ignition on. With the DRBIII® read the Right SIACM active DTCs. Did the DRBIII® show any active DTCs? Yes → Refer to symptom list for problems related to Right SIACM. Perform AIRBAG VERIFICATION TEST - VER 1. No → Go To 3	All

INTERROGATE RIGHT SIACM — Continued

TEST	ACTION	APPLICABILITY
3	**WARNING: TURN THE IGNITION OFF, DISCONNECT THE BATTERY AND WAIT TWO MINUTES BEFORE PROCEEDING.** If there are no possible causes remaining, view repair. Repair Replace the Airbag Control Module in accordance with Service Instructions. WARNING: IF THE AIRBAG CONTROL MODULE IS DROPPED AT ANY TIME, IT MUST BE REPLACED. Perform AIRBAG VERIFICATION TEST - VER 1.	All
4	**NOTE: Ensure the battery is fully charged.** With the DRBIII®, record and erase all DTCs from all modules. All active codes must be resolved before diagnosing any stored codes. Maintain a safe distance from all airbags while performing the following steps. With the DRBIII® monitor active codes as you work through the system. **NOTE: If equipped with Passenger Airbag On-Off switch, read the DTC's in all switch positions.** Wiggle the wiring harness and connectors of the appropriate airbag system and rotate the steering wheel from stop to stop. **NOTE: Check connectors - Clean and repair as necessary.** You have just attempted to simulate the condition that initially set the trouble code message. The following additional checks may assist you in identifying a possible intermittent problem: - Visually inspect related wire harness connectors. Look for broken, bent, pushed out, spread, corroded, or contaminated terminals. - Visually inspect the related harnesses. Look for chafed, pierced, pinched or partially broken wire. - Refer to Wiring Diagrams and Technical Service Bulletins that may apply. Did the DTC become active ? Yes → Select appropriate symptom from Symptom List. No → No problem found at this time. Erase all codes before returning vehicle to customer.	All

Symptom:
LOSS OF IGNITION RUN - START

When Monitored and Set Condition:

LOSS OF IGNITION RUN - START

When Monitored: With the ignition in the Run or Start position the module monitors the Run - Start circuit for proper system voltage.

Set Condition: The code will set, if the voltage on the Run - Start circuit drops below approximately 4.5 volts for the ACM or 6.7 volts for the SIACM.

POSSIBLE CAUSES
AIRBAG SYSTEM COMPONENT SHORTED TO GROUND
IGNITION SWITCH RUN-START CIRCUIT OPEN
FUSED IGNITION SWITCH OUTPUT RUN-START CIRCUIT OPEN
ACM, FUSED IGNITION OUTPUT RUN-START CIRCUIT OPEN
MODULE RUN - START SHORTED TO GROUND
RSIACM, LOW IGNITION RUN - START VOLTAGE
LSIACM - LOW IGNITION RUN - START VOLTAGE
STORED CODE OR INTERMITTENT CONDITION
ACTIVE CODE PRESENT

TEST	ACTION	APPLICABILITY
1	Turn the ignition on. **NOTE: Ensure that the battery is fully charged.** **NOTE: For the purpose of this test, the AECM and ORC modules will be referred to as an ACM.** From the list below, select the appropriate module and DTC type for the this diagnostic trouble code. SELECT ONE: ACM - ACTIVE DTC Go To 2 ACM - STORED DTC Go To 7 LEFT SIACM - ACTIVE DTC Go To 8 RIGHT SIACM - ACTIVE DTC Go To 9 **NOTE: When reconnecting Airbag system components, the ignition must be turned off and the battery must be disconnected.**	All

LOSS OF IGNITION RUN - START — Continued

TEST	ACTION	APPLICABILITY
2	Turn ignition off. Remove and inspect the Airbag Run - Start Fuse. **NOTE: Check connectors - Clean and repair as necessary.** Is the Fuse open? Yes → Go To 3 No → Go To 4	All
3	**WARNING: TO AVOID PERSONAL INJURY OR DEATH, TURN IGNITION OFF, DISCONNECT THE BATTERY AND WAIT TWO MINUTES BEFORE PROCEEDING.** Measure the resistance of the Fused Ignition Switch Output Run-Start circuit between the Airbag Run-Start Fuse and ground. While monitoring the ohmmeter, disconnect each airbag system component on the Run - Start circuit one at a time. **NOTE: Refer to the service information and system schematics to identify component(s) on the run - start circuit.** Is the resistance above 10K ohms: Yes - after removing a component? Replace the shorted airbag system component in accordance with Service Instructions and replace the airbag Run - Start fuse. Perform AIRBAG VERIFICATION TEST - VER 1. No - after all components are removed? Repair the Fused Ignition Run - Start circuit shorted to ground and replace Airbag Run-Start Fuse. Perform AIRBAG VERIFICATION TEST - VER 1.	All
4	Turn the ignition on. Measure the voltage of the Ignition Switch Output circuit between the Airbag Run - Start Fuse and ground. Is the voltage above approximately 4.5 volts? Yes → Go To 5 No → Repair the open Ignition Switch Output Run-Start circuit. Perform AIRBAG VERIFICATION TEST - VER 1.	All
5	**WARNING: TO AVOID PERSONAL INJURY OR DEATH, TURN THE IGNITION OFF, DISCONNECT THE BATTERY AND WAIT TWO MINUTES BEFORE PROCEEDING.** Disconnect the Airbag Control Module connector. **NOTE: Check connectors - Clean and repair as necessary.** Reinstall the previously removed Airbag Run-Start Fuse. **WARNING: TO AVOID PERSONAL INJURY OR DEATH, TURN THE IGNITION ON, THEN RECONNECT THE BATTERY.** Measure the voltage of the Fused Ignition Switch Output Run-Start Circuit between the Airbag Control Module connector ground. Is the voltage above approximately 4.5 volts? Yes → Go To 6 No → Repair open Fused Ignition Switch Output Run-Start circuit. Perform AIRBAG VERIFICATION TEST - VER 1.	All

LOSS OF IGNITION RUN - START — Continued

TEST	ACTION	APPLICABILITY
6	**WARNING: TO AVOID PERSONAL INJURY OR DEATH, TURN IGNITION OFF, DISCONNECT THE BATTERY AND WAIT TWO MINUTES BEFORE PROCEEDING.** **WARNING: IF THE AIRBAG CONTROL MODULE IS DROPPED AT ANY TIME, IT MUST BE REPLACED. FAILURE TO TAKE THE PROPER PRECAUTIONS COULD RESULT IN ACCIDENTAL AIRBAG DEPLOYMENT AND PERSONAL INJURY OR DEATH.** If there are no possible causes remaining, view repair. Repair Replace the Airbag Control Module in accordance with Service Instructions. Perform AIRBAG VERIFICATION TEST - VER 1.	All
7	**NOTE: Ensure the battery is fully charged.** With the DRBIII®, record and erase all DTCs from all modules. All active codes must be resolved before diagnosing any stored codes. Maintain a safe distance from all airbags while performing the following steps. With the DRBIII® monitor active codes as you work through the system. **NOTE: If equipped with Passenger Airbag On-Off switch, read the DTC's in all switch positions.** Wiggle the wiring harness and connectors of the appropriate airbag system and rotate the steering wheel from stop to stop. **NOTE: Check connectors - Clean and repair as necessary.** You have just attempted to simulate the condition that initially set the trouble code message. The following additional checks may assist you in identifying a possible intermittent problem: - Visually inspect related wire harness connectors. Look for broken, bent, pushed out, spread, corroded, or contaminated terminals. - Visually inspect the related harnesses. Look for chafed, pierced, pinched or partially broken wire. - Refer to Wiring Diagrams and Technical Service Bulletins that may apply. Did the DTC become active ? Yes → Select appropriate symptom from Symptom List. No → No problem found at this time. Erase all codes before returning vehicle to customer.	All
8	**WARNING: TURN IGNITION OFF, DISCONNECT THE BATTERY AND WAIT TWO MINUTES BEFORE PROCEEDING.** If there are no possible causes remaining, view repair. Repair Replace the Left Side Impact Airbag Control Module in accordance with Service Instructions. WARNING: IF THE MODULE IS DROPPED AT ANY TIME, IT MUST BE REPLACED. Perform AIRBAG VERIFICATION TEST - VER 1.	All
9	**WARNING: TURN IGNITION OFF, DISCONNECT THE BATTERY AND WAIT TWO MINUTES BEFORE PROCEEDING.** If there are no possible causes remaining, view repair. Repair Replace the Right Side Impact Airbag Control Module in accordance with Service information. WARNING: IF THE MODULE IS DROPPED AT ANY TIME, IT MUST BE REPLACED. Perform AIRBAG VERIFICATION TEST - VER 1.	All

Symptom:
LOSS OF IGNITION RUN ONLY

When Monitored and Set Condition:

LOSS OF IGNITION RUN ONLY

When Monitored: With the ignition in the run position the module monitors the Run Only circuit for proper system voltage.

Set Condition: If the voltage on the Run Only circuit drops below 4.5 volts, the code will set.

POSSIBLE CAUSES
IGNITION SWITCH OUTPUT RUN CIRCUIT OPEN
FUSED IGNITION SWITCH OUTPUT RUN CIRCUIT OPEN
ACM, FUSED IGNITION OUTPUT RUN CIRCUIT OPEN
CHECKING FOR A SHORTED RUN CIRCUIT
FUSED IGNITION SWITCH OUTPUT RUN CIRCUIT SHORT TO GROUND
ACM, FUSED IGNITION RUN CIRCUIT SHORT TO GROUND

TEST	ACTION	APPLICABILITY
1	Turn the ignition on. Ensure the battery is fully charged. **NOTE: For the purpose of this test, the AECM and ORC modules will be referred to as an ACM.** SELECT ACTIVE : ACM - ACTIVE DTC Go To 2 **NOTE: When reconnecting Airbag system components, the ignition must be turned off and the battery must be disconnected.**	All
2	Turn the ignition off. Remove and inspect the Airbag Run circuit fuse. Is the Fuse open? Yes → Go To 3 No → Go To 6	All
3	Remove the Airbag Run fuse. **NOTE: Check connectors - Clean and repair as necessary.** Measure the resistance of the Fused Ignition Switch Output Run circuit between the Run Fuse and ground. Is the resistance below 10.0 ohms ? Yes → Go To 4 No → Replace the defective fuse. Perform AIRBAG VERIFICATION TEST - VER 1.	All

LOSS OF IGNITION RUN ONLY — Continued

TEST	ACTION	APPLICABILITY
4	**WARNING: TO AVOID PERSONAL INJURY OR DEATH, TURN THE IGNITION OFF, DISCONNECT THE BATTERY AND WAIT TWO MINUTES BEFORE PROCEEDING.** Disconnect the Airbag Control Module connector. **NOTE: Check connectors - Clean and repair as necessary.** Measure the resistance of the Fused Ignition Switch Output Run circuit between the ACM connector and ground. Is the resistance below 10K ohms ? Yes → Repair the Fused Ignition Switch Output Run circuit for a short to ground and replace Airbag Run Fuse. Perform AIRBAG VERIFICATION TEST - VER 1. No → Go To 5	All
5	**WARNING: TO AVOID PERSONAL INJURY OR DEATH, TURN IGNITION OFF, DISCONNECT THE BATTERY AND WAIT TWO MINUTES BEFORE PROCEEDING.** **WARNING: IF THE AIRBAG CONTROL MODULE IS DROPPED AT ANY TIME, IT MUST BE REPLACED. FAILURE TO TAKE THE PROPER PRECAUTIONS COULD RESULT IN ACCIDENTAL AIRBAG DEPLOYMENT AND PERSONAL INJURY OR DEATH.** If there are no possible causes remaining, view repair. Repai: Replace the Airbag Control Module in accordance with Service Instructions and replace the Run Only Fuse. Perform AIRBAG VERIFICATION TEST - VER 1. **NOTE: When reconnecting Airbag system components, the ignition must be turned off and the battery must be disconnected.**	All
6	Turn the ignition on. Measure the voltage of the Ignition Switch Output Run circuit between the Airbag Run circuit fuse and ground. Is the voltage above approximately 4.5 volts? Yes → Go To 7 No → Repair the open Ignition Switch Output Run circuit. Perform AIRBAG VERIFICATION TEST - VER 1.	All
7	**WARNING: TO AVOID PERSONAL INJURY OR DEATH, TURN THE IGNITION OFF, DISCONNECT THE BATTERY AND WAIT TWO MINUTES BEFORE PROCEEDING.** Disconnect the Airbag Control Module connector. **NOTE: Check connectors - Clean and repair as necessary.** Reinstall the airbag Run fuse. **WARNING: TO AVOID PERSONAL INJURY OR DEATH, TURN THE IGNITION ON, THEN RECONNECT THE BATTERY.** Measure the voltage of the Fused Ignition Switch Output Run circuit at the Airbag Control Module connector. Is the voltage above approximately 4.5 volts? Yes → Go To 8 No → Repair the an open or high resistance in the Fused Ignition Switch Output Run circuit. Perform AIRBAG VERIFICATION TEST - VER 1.	All

LOSS OF IGNITION RUN ONLY — Continued

TEST	ACTION	APPLICABILITY
8	**WARNING: TO AVOID PERSONAL INJURY OR DEATH, TURN THE IGNITION OFF, DISCONNECT THE BATTERY AND WAIT TWO MINUTES BEFORE PROCEEDING.** **WARNING: IF THE AIRBAG CONTROL MODULE IS DROPPED AT ANY TIME, IT MUST BE REPLACED. FAILURE TO TAKE THE PROPER PRECAUTIONS COULD RESULT IN ACCIDENTAL AIRBAG DEPLOYMENT AND PERSONAL INJURY OR DEATH.** If there are no possible causes remaining, view repair. Repair Replace the Airbag Control Module in accordance with Service Instructions. Perform AIRBAG VERIFICATION TEST - VER 1.	All

Symptom:
MODULE NOT CONFIGURED FOR SAB

When Monitored and Set Condition:

MODULE NOT CONFIGURED FOR SAB

When Monitored: With ignition on, the ACM monitors the PCI Bus for a message containing an ″A″ in the 4 th position of the VIN. This character identifies the type of safety equipment and should match the VIN. The PCM transmits the VIN every 13.76 seconds.

Set Condition: The code will set, if the ACM detects a Side Impact Airbag Module active on the PCI Bus and the 4 th character of the VIN message is not an ″A″.

POSSIBLE CAUSES
CHECK PCM VIN
PCM, PCI COMMUNICATION FAILURE
MODULE NOT CONFIGURED
ACM, NOT CONFIGURED FOR SIDE AIRBAGS
STORED CODE OR INTERMITTENT CONDITION
ACTIVE CODE PRESENT

TEST	ACTION	APPLICABILITY
1	Turn the ignition on. Ensure the battery is fully charged. **NOTE: For the purpose of this test, the AECM and ORC modules will be referred to as an ACM.** SELECT ACTIVE or STORED DTC: ACM - ACTIVE DTC Go To 2 ACM - STORED DTC Go To 6 **NOTE: When reconnecting Airbag system components, the ignition must be turned off and the battery must be disconnected.**	All
2	Turn the ignition on. Connect the DRB to the data link connector and select PCM, SYSTEM TEST. Does the DRB show PCM Active on the Bus:? Yes → Go To 3 No → Refer to category COMMUNICATION and select the related symptom. Perform AIRBAG VERIFICATION TEST - VER 1.	All

MODULE NOT CONFIGURED FOR SAB — Continued

TEST	ACTION	APPLICABILITY
3	With the DRB read the Vehicle Identification Number in the Powertrain Control Module. Compare the VIN displayed on the DRB screen and the Vehicle VIN plate. Does the VIN plate and the PCM VIN match? Yes → Go To 4 No → Replace the Powertrain Control Module and program with the correct vehicle identification number. Perform AIRBAG VERIFICATION TEST - VER 1.	All
4	Using the DRB select MISCELLANEOUS and then CONFIGURE FOR SIDE AIRBAGS. Then press the continue button to display the current side airbag status. Does the DRBIII® show current status as ACM WITHOUT SIDE AIRBAG? Yes → Using the DRB select ACM WITH SIDE AIRBAGS to configure the ACM for Side Airbags. Perform AIRBAG VERIFICATION TEST - VER 1. No → Go To 5	All
5	**WARNING: TURN THE IGNITION OFF, DISCONNECT THE BATTERY AND WAIT TWO MINUTES BEFORE PROCEEDING.** **WARNING: IF THE AIRBAG CONTROL MODULE IS DROPPED AT ANY TIME, IT MUST BE REPLACED.** If there are no possible causes remaining, view repair. Repair Replace the Airbag Control Module in accordance with Service Instructions. WARNING: IF THE AIRBAG CONTROL MODULE IS DROPPED AT ANY TIME, IT MUST BE REPLACED. Perform AIRBAG VERIFICATION TEST - VER 1.	All
6	**NOTE: Ensure the battery is fully charged.** With the DRBIII®, record and erase all DTCs from all modules. All active codes must be resolved before diagnosing any stored codes. Maintain a safe distance from all airbags while performing the following steps. With the DRBIII® monitor active codes as you work through the system. **NOTE: If equipped with Passenger Airbag On-Off switch, read the DTC's in all switch positions.** Wiggle the wiring harness and connectors of the appropriate airbag system and rotate the steering wheel from stop to stop. **NOTE: Check connectors - Clean and repair as necessary.** You have just attempted to simulate the condition that initially set the trouble code message. The following additional checks may assist you in identifying a possible intermittent problem: - Visually inspect related wire harness connectors. Look for broken, bent, pushed out, spread, corroded, or contaminated terminals. - Visually inspect the related harnesses. Look for chafed, pierced, pinched or partially broken wire. - Refer to Wiring Diagrams and Technical Service Bulletins that may apply. Did the DTC become active ? Yes → Select appropriate symptom from Symptom List. No → No problem found at this time. Erase all codes before returning vehicle to customer.	All

Symptom:
NO CLUSTER MESSAGE

When Monitored and Set Condition:

NO CLUSTER MESSAGE

When Monitored: With ignition on, the ACM monitors the PCI Bus for a message from the MIC containing the airbag warning indicator status. The MIC transmits the message one time at ignition on, lamp state change, or in response to the ACM message.

Set Condition: If the MIC message is not received for 10 consecutive seconds, the code will set.

POSSIBLE CAUSES
MIC, COMMUNICATION FAILURE
ACM, NO CLUSTER MESSAGES
STORED CODE OR INTERMITTENT CONDITION
ACTIVE CODE PRESENT

TEST	ACTION	APPLICABILITY
1	**NOTE: Ensure that the battery is fully charged.** **NOTE: For the purpose of this test, the AECM and ORC modules will be referred to as an ACM.** Turn the ignition on. SELECT ACTIVE or STORED DTC: ACM - ACTIVE DTC Go To 2 ACM - STORED DTC Go To 4 **NOTE: When reconnecting Airbag system components, the ignition must be turned off and the battery must be disconnected.**	All
2	Turn the ignition on. With the DRBIII®, ensure PCI Bus communications with the Instrument Cluster. Is the Instrument Cluster communicating on the PCI Bus? Yes → Go To 3 No → Refer to category COMMUNICATION CATEGORY and select the related symptom INSTRUMENT CLUSTER BUS +/- SIGNAL OPEN or NO RESPONSE.	All

NO CLUSTER MESSAGE — Continued

TEST	ACTION	APPLICABILITY
3	**WARNING: TO AVOID PERSONAL INJURY OR DEATH, TURN THE IGNITION OFF, DISCONNECT THE BATTERY AND WAIT TWO MINUTES BEFORE PROCEEDING.** **WARNING: IF THE AIRBAG CONTROL MODULE IS DROPPED AT ANY TIME, IT MUST BE REPLACED. FAILURE TO TAKE THE PROPER PRECAUTIONS COULD RESULT IN ACCIDENTAL AIRBAG DEPLOYMENT AND PERSONAL INJURY OR DEATH.** If there are no possible causes remaining, view repair. Repair Replace the Airbag Control Module in accordance with Service Instructions. Perform AIRBAG VERIFICATION TEST - VER 1. **NOTE: When reconnecting airbag system components the Ignition must be turned off and the Battery must be disconnected.**	All
4	**NOTE: Ensure the battery is fully charged.** With the DRBIII®, record and erase all DTCs from all modules. All active codes must be resolved before diagnosing any stored codes. Maintain a safe distance from all airbags while performing the following steps. With the DRBIII® monitor active codes as you work through the system. **NOTE: If equipped with Passenger Airbag On-Off switch, read the DTC's in all switch positions.** Wiggle the wiring harness and connectors of the appropriate airbag system and rotate the steering wheel from stop to stop. **NOTE: Check connectors - Clean and repair as necessary.** You have just attempted to simulate the condition that initially set the trouble code message. The following additional checks may assist you in identifying a possible intermittent problem: - Visually inspect related wire harness connectors. Look for broken, bent, pushed out, spread, corroded, or contaminated terminals. - Visually inspect the related harnesses. Look for chafed, pierced, pinched or partially broken wire. - Refer to Wiring Diagrams and Technical Service Bulletins that may apply. Did the DTC become active ? Yes → Select appropriate symptom from Symptom List. No → No problem found at this time. Erase all codes before returning vehicle to customer.	All

Symptom:
NO LEFT SIACM MESSAGE

When Monitored and Set Condition:

NO LEFT SIACM MESSAGE

When Monitored: With ignition on, the ACM monitors the PCI Bus for the Left Side Impact Airbag Control Module status message. The Left SIACM transmits the status message to the ACM at 1 - second intervals.

Set Condition: If the ACM fails to see the Left SIACM status message on the PCI Bus for 10 seconds the code will set.

POSSIBLE CAUSES
NO LEFT SIACM MESSAGE
ACM, NO LEFT SIACM MESSAGE
STORED CODE OR INTERMITTENT CONDITION
ACTIVE CODE PRESENT

TEST	ACTION	APPLICABILITY
1	**NOTE: Ensure the battery is fully charged.** Turn the ignition on. **NOTE: For the purpose of this test, the AECM and ORC modules will be referred to as an ACM.** SELECT ACTIVE or STORED DTC: ACM - ACTIVE DTC Go To 2 ACM - STORED DTC Go To 4	All
2	With the DRBIII® select PASSIVE RESTRAINTS, SIDE AIRBAG then LEFT SIDE from the DRB menu. Does the DRBIII® show NO RESPONSE or BUS +/- SIGNAL OPEN? Yes → Refer to the Communication category for the related symptom. Perform AIRBAG VERIFICATION TEST - VER 1. No → Go To 3	All
3	**WARNING: TURN THE IGNITION OFF, DISCONNECT THE BATTERY AND WAIT TWO MINUTES BEFORE PROCEEDING.** If there are no possible causes remaining, view repair. Repair Replace the Airbag Control Module in accordance with Service Instructions. WARNING: IF THE AIRBAG CONTROL MODULE IS DROPPED AT ANY TIME, IT MUST BE REPLACED. Perform AIRBAG VERIFICATION TEST - VER 1.	All

NO LEFT SIACM MESSAGE — Continued

TEST	ACTION	APPLICABILITY
4	**NOTE: Ensure the battery is fully charged.** With the DRBIII®, record and erase all DTCs from all modules. All active codes must be resolved before diagnosing any stored codes. Maintain a safe distance from all airbags while performing the following steps. With the DRBIII® monitor active codes as you work through the system. **NOTE: If equipped with Passenger Airbag On-Off switch, read the DTC's in all switch positions.** Wiggle the wiring harness and connectors of the appropriate airbag system and rotate the steering wheel from stop to stop. **NOTE: Check connectors - Clean and repair as necessary.** You have just attempted to simulate the condition that initially set the trouble code message. The following additional checks may assist you in identifying a possible intermittent problem: - Visually inspect related wire harness connectors. Look for broken, bent, pushed out, spread, corroded, or contaminated terminals. - Visually inspect the related harnesses. Look for chafed, pierced, pinched or partially broken wire. - Refer to Wiring Diagrams and Technical Service Bulletins that may apply. Did the DTC become active ? Yes → Select appropriate symptom from Symptom List. No → No problem found at this time. Erase all codes before returning vehicle to customer.	All

Symptom:
NO PCI TRANSMISSION

When Monitored and Set Condition:

NO PCI TRANSMISSION

When Monitored: With the ignition on and the module transmitting information on the PCI BUS.

Set Condition: The code will set if the onboard diagnostic cannot detect the module transmitting information on the PCI BUS for 4 consecutive seconds. NOTE: Any PCI Bus Failure will may cause a stored code to set.

POSSIBLE CAUSES
AIRBAG CONTROL MODULE - ACM
LEFT SIDE IMPACT AIRBAG CONTROL MODULE - LSIACM
RIGHT SIDE IMPACT AIRBAG CONTROL MODULE - RSIACM
STORED CODE OR INTERMITTENT CONDITION
ACTIVE CODE PRESENT

NO PCI TRANSMISSION — Continued

TEST	ACTION	APPLICABILITY
1	**NOTE: Ensure that the battery is fully charged.** IF THE MODULE IS DROPPED AT ANY TIME, IT MUST BE REPLACED. Turn the ignition on. From the list below, select the appropriate module and DTC type for the this diagnostic trouble code. **NOTE: For the purpose of this test, the AECM and ORC modules will be referred to as an ACM.** Select the appropriate module and type of DTC ACM - ACTIVE Replace the Airbag Control Module in accordance with Service Instructions. Perform AIRBAG VERIFICATION TEST - VER 1. ACM - STORED Go To 2 LEFT SIACM - ACTIVE WARNING: TURN THE IGNITION OFF, DISCONNECT THE BATTERY AND WAIT TWO MINUTES BEFORE PROCEEDING. Replace the Left Side Impact Airbag Control Module in accordance with Service Instructions. Perform AIRBAG VERIFICATION TEST - VER 1. LEFT SIACM - STORED Go To 2 RIGHT SIACM - ACTIVE WARNING: TURN THE IGNITION OFF, DISCONNECT THE BATTERY AND WAIT TWO MINUTES BEFORE PROCEEDING. Replace the Right Side Impact Airbag Control Module in accordance with Service information. Perform AIRBAG VERIFICATION TEST - VER 1. RIGHT SIACM - STORED Go To 2	All

NO PCI TRANSMISSION — Continued

TEST	ACTION	APPLICABILITY
2	**NOTE: Ensure the battery is fully charged.** With the DRBIII®, record and erase all DTCs from all modules. All active codes must be resolved before diagnosing any stored codes. Maintain a safe distance from all airbags while performing the following steps. With the DRBIII® monitor active codes as you work through the system. **NOTE: If equipped with Passenger Airbag On-Off switch, read the DTC's in all switch positions.** Wiggle the wiring harness and connectors of the appropriate airbag system and rotate the steering wheel from stop to stop. **NOTE: Check connectors - Clean and repair as necessary.** You have just attempted to simulate the condition that initially set the trouble code message. The following additional checks may assist you in identifying a possible intermittent problem: - Visually inspect related wire harness connectors. Look for broken, bent, pushed out, spread, corroded, or contaminated terminals. - Visually inspect the related harnesses. Look for chafed, pierced, pinched or partially broken wire. - Refer to Wiring Diagrams and Technical Service Bulletins that may apply. Did the DTC become active ? Yes → Select appropriate symptom from Symptom List. No → No problem found at this time. Erase all codes before returning vehicle to customer.	All

Symptom:
NO RIGHT SIACM MESSAGE

When Monitored and Set Condition:

NO RIGHT SIACM MESSAGE

When Monitored: With ignition on, the ACM monitors the PCI Bus for the Right Side Impact Airbag Control Module status message. The Right SIACM transmits the status message to the ACM at 1 - second intervals.

Set Condition: If the ACM fails to see the Right SIACM status message on the PCI Bus for 10 seconds the code will set.

POSSIBLE CAUSES
NO RIGHT SIACM MESSAGE
ACM, NO RIGHT SIACM MESSAGE
STORED CODE OR INTERMITTENT CONDITION
ACTIVE CODE PRESENT

TEST	ACTION	APPLICABILITY
1	**NOTE: Ensure the battery is fully charged.** Turn the ignition on. **NOTE: For the purpose of this test, the AECM and ORC modules will be referred to as an ACM.** SELECT ACTIVE or STORED DTC: ACM - ACTIVE DTC Go To 2 ACM - STORED DTC Go To 4 **NOTE: When reconnecting Airbag system components, the ignition must be turned off and the battery must be disconnected.**	All
2	With the DRBIII® select SIDE AIRBAG and the RIGHT SIDE AIRBAG from the DRBIII® menu. Does the DRBIII® show NO RESPONSE or BUS +/- SIGNAL OPEN? Yes → Refer to the COMMUNICATION category for the related symptom. Perform AIRBAG VERIFICATION TEST - VER 1. No → Go To 3	All

NO RIGHT SIACM MESSAGE — Continued

TEST	ACTION	APPLICABILITY
3	**WARNING: TURN THE IGNITION OFF, DISCONNECT THE BATTERY AND WAIT TWO MINUTES BEFORE PROCEEDING.** If there are no possible causes remaining, view repair. Repair Replace the Airbag Control Module in accordance with Service Instructions. WARNING: IF THE AIRBAG CONTROL MODULE IS DROPPED AT ANY TIME, IT MUST BE REPLACED. Perform AIRBAG VERIFICATION TEST - VER 1. **NOTE: When reconnecting airbag system components the Ignition must be turned off and the Battery must be disconnected.**	All
4	**NOTE: Ensure the battery is fully charged.** With the DRBIII®, record and erase all DTCs from all modules. All active codes must be resolved before diagnosing any stored codes. Maintain a safe distance from all airbags while performing the following steps. With the DRBIII® monitor active codes as you work through the system. **NOTE: If equipped with Passenger Airbag On-Off switch, read the DTC's in all switch positions.** Wiggle the wiring harness and connectors of the appropriate airbag system and rotate the steering wheel from stop to stop. **NOTE: Check connectors - Clean and repair as necessary.** You have just attempted to simulate the condition that initially set the trouble code message. The following additional checks may assist you in identifying a possible intermittent problem: - Visually inspect related wire harness connectors. Look for broken, bent, pushed out, spread, corroded, or contaminated terminals. - Visually inspect the related harnesses. Look for chafed, pierced, pinched or partially broken wire. - Refer to Wiring Diagrams and Technical Service Bulletins that may apply. Did the DTC become active ? Yes → Select appropriate symptom from Symptom List. No → No problem found at this time. Erase all codes before returning vehicle to customer.	All

Symptom:
PASSENGER SQUIB 1 CIRCUIT OPEN

When Monitored and Set Condition:

PASSENGER SQUIB 1 CIRCUIT OPEN

When Monitored: When the ignition is On, the ACM monitors the resistance of the Passenger Squib 1 circuits.

Set Condition: The ACM has detected an open circuit or high resistance on the Passenger Squib 1 circuits.

POSSIBLE CAUSES
PASSENGER AIRBAG OPEN
PASSENGER SQUIB 1 LINE 1 OR LINE 2 CIRCUIT OPEN
STORED CODE OR INTERMITTENT CONDITION
ACM, PASSENGER SQUIB 1 CIRCUIT OPEN
ACTIVE CODE PRESENT

TEST	ACTION	APPLICABILITY
1	**NOTE: Ensure the battery is fully charged.** Turn the ignition on. **NOTE: For the purpose of this test, the AECM and ORC modules will be referred to as an ACM.** SELECT ACTIVE or STORED DTC: ACM - ACTIVE DTC Go To 2 ACM - STORED DTC Go To 4 **NOTE: When reconnecting Airbag system components, the ignition must be turned off and the battery must be disconnected.**	All

PASSENGER SQUIB 1 CIRCUIT OPEN — Continued

TEST	ACTION	APPLICABILITY
2	**WARNING: TO AVOID PERSONAL INJURY OR DEATH, TURN THE IGNITION OFF, DISCONNECT THE BATTERY AND WAIT TWO MINUTES BEFORE PROCEEDING.** **WARNING: DO NOT PLACE AN INTACT UNDEPLOYED AIRBAG FACE DOWN ON A HARD SURFACE, THE AIRBAG WILL PROPEL INTO THE AIR IF ACCIDENTALLY DEPLOYED, AND COULD RESULT IN SERIOUS OR FATAL INJURY.** Disconnect the Passenger Airbag. **NOTE: Check connectors - Clean and repair as necessary.** Connect the appropriate Load Tool to the Passenger Airbag connector. **WARNING: TO AVOID PERSONAL INJURY OR DEATH, TURN IGNITION ON, THEN RECONNECT THE BATTERY.** With the DRBIII®, read the active Airbag DTCs. Does the DRBIII® show PASSENGER SQUIB 1 CIRCUIT OPEN? Yes → Go To 3 No → Replace the Passenger Airbag in accordance with the Service Information. Perform AIRBAG VERIFICATION TEST - VER 1.	All
3	**WARNING: TO AVOID PERSONAL INJURY OR DEATH, TURN THE IGNITION OFF, DISCONNECT THE BATTERY AND WAIT TWO MINUTES BEFORE PROCEEDING.** Disconnect the Airbag Control module connector. **NOTE: Check connectors - Clean and repair as necessary.** Connect the appropriate Load Tool adaptor to the Airbag Control Module connector. Disconnect the Load Tool from the Passenger Airbag connector. Measure the resistance of the Passenger Squib 1 Line 1 and Line 2 circuit between the ACM Adaptor and the Passenger Airbag connector. Is the resistance below 1.0 ohms on both circuits? Yes → Replace the Airbag Control Module in accordance with Service Instructions. Perform AIRBAG VERIFICATION TEST - VER 1. No → Repair open or high resistance in Passenger Squib 1 Line 1 or Line 2 circuits. Perform AIRBAG VERIFICATION TEST - VER 1.	All

PASSENGER SQUIB 1 CIRCUIT OPEN — Continued

TEST	ACTION	APPLICABILITY
4	**NOTE: Ensure the battery is fully charged.** With the DRBIII®, record and erase all DTCs from all modules. All active codes must be resolved before diagnosing any stored codes. Maintain a safe distance from all airbags while performing the following steps. With the DRBIII® monitor active codes as you work through the system. **NOTE: If equipped with Passenger Airbag On-Off switch, read the DTC's in all switch positions.** Wiggle the wiring harness and connectors of the appropriate airbag system and rotate the steering wheel from stop to stop. **NOTE: Check connectors - Clean and repair as necessary.** You have just attempted to simulate the condition that initially set the trouble code message. The following additional checks may assist you in identifying a possible intermittent problem: - Visually inspect related wire harness connectors. Look for broken, bent, pushed out, spread, corroded, or contaminated terminals. - Visually inspect the related harnesses. Look for chafed, pierced, pinched or partially broken wire. - Refer to Wiring Diagrams and Technical Service Bulletins that may apply. Did the DTC become active ? Yes → Select appropriate symptom from Symptom List. No → No problem found at this time. Erase all codes before returning vehicle to customer.	All

Symptom:
PASSENGER SQUIB 1 CIRCUIT SHORT

When Monitored and Set Condition:

PASSENGER SQUIB 1 CIRCUIT SHORT

When Monitored: When the ignition is on, the ACM monitors the resistance of the Passenger Squib 1 circuits.

Set Condition: The ACM has detected low resistance in the Passenger Squib 1 circuits.

POSSIBLE CAUSES
PASSENGER AIRBAG CIRCUIT SHORT
PASSENGER SQUIB 1 LINE 1 SHORT TO LINE 2
ACM, PASSENGER SQUIB 1 CIRCUIT SHORT
STORED CODE OR INTERMITTENT CONDITION
ACTIVE CODE PRESENT

TEST	ACTION	APPLICABILITY
1	**NOTE: Ensure that the battery is fully charged.** Turn the ignition on. **NOTE: For the purpose of this test, the AECM and ORC modules will be referred to as an ACM.** SELECT ACTIVE or STORED DTC: ACM - ACTIVE DTC Go To 2 ACM - STORED DTC Go To 4 **NOTE: When reconnecting Airbag system components, the ignition must be turned off and the battery must be disconnected.**	All

PASSENGER SQUIB 1 CIRCUIT SHORT — Continued

TEST	ACTION	APPLICABILITY
2	**WARNING: TO AVOID PERSONAL INJURY OR DEATH, TURN THE IGNITION OFF, DISCONNECT THE BATTERY AND WAIT TWO MINUTES BEFORE PROCEEDING.** **WARNING: DO NOT PLACE AN INTACT UNDEPLOYED AIRBAG FACE DOWN ON A HARD SURFACE, THE AIRBAG WILL PROPEL INTO THE AIR IF ACCIDENTALLY DEPLOYED, AND COULD RESULT IN SERIOUS OR FATAL INJURY.** Disconnect the Passenger Airbag. **NOTE: Check connectors - Clean and repair as necessary.** Connect the appropriate Load Tool to the Passenger Airbag connector. **WARNING: TO AVOID PERSONAL INJURY OR DEATH, TURN THE IGNITION ON, THEN RECONNECT THE BATTERY.** With the DRBIII®, read the active airbag DTCs. Does the DRBIII® show PASSENGER SQUIB 1 CIRCUIT SHORT? Yes → Go To 3 No → Replace Passenger Airbag in accordance with the Service Information. Perform AIRBAG VERIFICATION TEST - VER 1.	All
3	**WARNING: TO AVOID PERSONAL INJURY OR DEATH, TURN THE IGNITION OFF, DISCONNECT THE BATTERY AND WAIT TWO MINUTES BEFORE PROCEEDING.** Disconnect the Airbag Control Module connector **NOTE: Check connectors - Clean and repair as necessary.** Connect the appropriate Load Tool adapter to the Airbag Control Module connector. Disconnect the Load Tool from the Passenger airbag connector. Measure the resistance between Passenger Squib 1 Line 1 and Squib 1 Line 2 circuit at the Passenger Airbag connector. Is the resistance below 10K ohms? Yes → Repair Passenger Squib 1 Line 1 circuit short to Passenger Squib 1 Line 2 circuit. Perform AIRBAG VERIFICATION TEST - VER 1. No → Replace the Airbag Control Module in accordance with Service Instructions. Perform AIRBAG VERIFICATION TEST - VER 1. **NOTE: When reconnecting airbag system components the Ignition must be turned off and the Battery must be disconnected.**	All

PASSENGER SQUIB 1 CIRCUIT SHORT — Continued

TEST	ACTION	APPLICABILITY
4	**NOTE: Ensure the battery is fully charged.** With the DRBIII®, record and erase all DTCs from all modules. All active codes must be resolved before diagnosing any stored codes. Maintain a safe distance from all airbags while performing the following steps. With the DRBIII® monitor active codes as you work through the system. **NOTE: If equipped with Passenger Airbag On-Off switch, read the DTC's in all switch positions.** Wiggle the wiring harness and connectors of the appropriate airbag system and rotate the steering wheel from stop to stop. **NOTE: Check connectors - Clean and repair as necessary.** You have just attempted to simulate the condition that initially set the trouble code message. The following additional checks may assist you in identifying a possible intermittent problem: - Visually inspect related wire harness connectors. Look for broken, bent, pushed out, spread, corroded, or contaminated terminals. - Visually inspect the related harnesses. Look for chafed, pierced, pinched or partially broken wire. - Refer to Wiring Diagrams and Technical Service Bulletins that may apply. Did the DTC become active ? Yes → Select appropriate symptom from Symptom List. No → No problem found at this time. Erase all codes before returning vehicle to customer.	All

Symptom:
PASSENGER SQUIB 1 SHORT TO BATTERY

When Monitored and Set Condition:

PASSENGER SQUIB 1 SHORT TO BATTERY

When Monitored: When the ignition is on, the ACM monitors the voltage of the Passenger Squib 1 circuits.

Set Condition: The ACM has detected high voltage on the Passenger Squib 1 circuits.

POSSIBLE CAUSES
PASSENGER AIRBAG CIRCUIT SHORT TO BATTERY
PASSENGER SQUIB 1 LINE 1 OR LINE 2 SHORT TO BATTERY
ACM, PASSENGER SQUIB 1 CIRCUIT SHORT TO BATTERY
STORED CODE OR INTERMITTENT CONDITION
ACTIVE CODE PRESENT

TEST	ACTION	APPLICABILITY
1	**NOTE: Ensure that the battery is fully charged.** Turn the ignition on. **NOTE: For the purpose of this test, the AECM and ORC modules will be referred to as an ACM.** SELECT ACTIVE or STORED DTC: ACM - ACTIVE DTC Go To 2 ACM - STORED DTC Go To 4 **NOTE: When reconnecting Airbag system components, the ignition must be turned off and the battery must be disconnected.**	All

PASSENGER SQUIB 1 SHORT TO BATTERY — Continued

TEST	ACTION	APPLICABILITY
2	**WARNING: TO AVOID PERSONAL INJURY OR DEATH, TURN THE IGNITION OFF, DISCONNECT THE BATTERY AND WAIT TWO MINUTES BEFORE PROCEEDING.** **WARNING: DO NOT PLACE AN INTACT UNDEPLOYED AIRBAG FACE DOWN ON A HARD SURFACE, THE AIRBAG WILL PROPEL INTO THE AIR IF ACCIDENTALLY DEPLOYED. FAILURE TO TAKE THE PROPER PRECAUTIONS COULD RESULT IN ACCIDENTAL AIRBAG DEPLOYMENT AND PERSONAL INJURY OR DEATH.** Disconnect the Passenger Airbag connector. **NOTE: Check connectors - Clean and repair as necessary.** Connect the appropriate Load Tool to the Passenger Airbag connector. **WARNING: TO AVOID PERSONAL INJURY OR DEATH, TURN THE IGNITION ON, THEN RECONNECT THE BATTERY.** With the DRBIII®, read the active Airbag DTCs. Does the DRBIII® show PASSENGER SQUIB 1 CIRCUIT SHORT TO BATTERY? Yes → Go To 3 No → Replace Passenger Airbag in accordance with the Service Information. Perform AIRBAG VERIFICATION TEST - VER 1.	All
3	**WARNING: TO AVOID PERSONAL INJURY OR DEATH, TURN THE IGNITION OFF, DISCONNECT THE BATTERY AND WAIT TWO MINUTES BEFORE PROCEEDING.** Disconnect the Airbag Control Module connector. **NOTE: Check connectors - Clean and repair as necessary.** Connect the appropriate Load Tool adaptor to the Airbag Control Module connector. **WARNING: TO AVOID PERSONAL INJURY OR DEATH, TURN IGNITION ON, THEN RECONNECT THE BATTERY.** Disconnect the Load Tool from the Passenger Airbag connector. Measure the voltage on the Passenger Squib 1 Line 1 and Line 2 circuits between the Passenger Airbag connector and ground. Is there any voltage present? Yes → Repair Passenger Squib 1 Line 1 or Line 2 circuit short to battery. Perform AIRBAG VERIFICATION TEST - VER 1. No → Replace the Airbag Control Module in accordance with Service Instructions. Perform AIRBAG VERIFICATION TEST - VER 1.	All

PASSENGER SQUIB 1 SHORT TO BATTERY — Continued

TEST	ACTION	APPLICABILITY
4	**NOTE: Ensure the battery is fully charged.** With the DRBIII®, record and erase all DTCs from all modules. All active codes must be resolved before diagnosing any stored codes. Maintain a safe distance from all airbags while performing the following steps. With the DRBIII® monitor active codes as you work through the system. **NOTE: If equipped with Passenger Airbag On-Off switch, read the DTC's in all switch positions.** Wiggle the wiring harness and connectors of the appropriate airbag system and rotate the steering wheel from stop to stop. **NOTE: Check connectors - Clean and repair as necessary.** You have just attempted to simulate the condition that initially set the trouble code message. The following additional checks may assist you in identifying a possible intermittent problem: - Visually inspect related wire harness connectors. Look for broken, bent, pushed out, spread, corroded, or contaminated terminals. - Visually inspect the related harnesses. Look for chafed, pierced, pinched or partially broken wire. - Refer to Wiring Diagrams and Technical Service Bulletins that may apply. Did the DTC become active ? Yes → Select appropriate symptom from Symptom List. No → No problem found at this time. Erase all codes before returning vehicle to customer.	All

Symptom:
PASSENGER SQUIB 1 SHORT TO GROUND

When Monitored and Set Condition:

PASSENGER SQUIB 1 SHORT TO GROUND

When Monitored: When the ignition is on, the ACM monitors the resistance of the Passenger Squib 1 circuits for low resistance.

Set Condition: The ACM has detected a short to ground in the Passenger Squib 1 circuits.

POSSIBLE CAUSES
PASSENGER AIRBAG CIRCUIT SHORT TO GROUND
PASSENGER SQUIB 1 LINE 1 AND LINE 2 SHORT TO GROUND
STORED CODE OR INTERMITTENT CONDITION
ACM, PASSENGER SQUIB 1 CIRCUIT SHORT TO GROUND
ACTIVE CODE PRESENT

TEST	ACTION	APPLICABILITY
1	**NOTE: Ensure that the battery is fully charged.** Turn the ignition on. **NOTE: Connect the appropriate Load Tool to the Passenger Airbag connector.** SELECT ACTIVE or STORED DTC: ACM - ACTIVE DTC Go To 2 ACM - STORED DTC Go To 5 **NOTE: When reconnecting Airbag system components, the ignition must be turned off and the battery must be disconnected.**	All

PASSENGER SQUIB 1 SHORT TO GROUND — Continued

TEST	ACTION	APPLICABILITY
2	**WARNING: TO AVOID PERSONAL INJURY OR DEATH, TURN THE IGNITION OFF, DISCONNECT THE BATTERY AND WAIT TWO MINUTES BEFORE PROCEEDING.** **WARNING: DO NOT PLACE AN INTACT UNDEPLOYED AIRBAG FACE DOWN ON A HARD SURFACE, THE AIRBAG WILL PROPEL INTO THE AIR IF ACCIDENTALLY DEPLOYED, AND COULD RESULT IN SERIOUS OR FATAL INJURY.** Disconnect the Passenger Airbag connector. **NOTE: Check connectors - Clean and repair as necessary.** Connect the appropriate Load Tool to the Passenger Airbag connector. **WARNING: TO AVOID PERSONAL INJURY OR DEATH, TURN THE IGNITION ON, THEN RECONNECT THE BATTERY.** With the DRBIII®, read the active Airbag DTCs. Does the DRBIII® show PASSENGER SQUIB 1 CIRCUIT SHORT TO GROUND? Yes → Go To 3 No → Replace the Passenger Airbag in accordance with the Service Information. Perform AIRBAG VERIFICATION TEST - VER 1.	All
3	**WARNING: TO AVOID PERSONAL INJURY OR DEATH, TURN THE IGNITION OFF, DISCONNECT THE BATTERY AND WAIT TWO MINUTES BEFORE PROCEEDING.** Disconnect the Airbag Control Module connector **NOTE: Check connectors - Clean repair as necessary.** Connect the appropriate Load Tool adaptor to the Airbag Control Module connector. Disconnect the Load Tool from the Passenger Airbag connector. Measure the resistance of the Passenger Squib 1 Line 1 or Line 2 circuit between the Passenger Airbag Module Connector and ground. Is the resistance below 10K ohms on either circuit? Yes → Repair Passenger Squib 1 Line 1 and Line 2 circuits for a short to ground. Perform AIRBAG VERIFICATION TEST - VER 1. No → Go To 4	All
4	**WARNING: TO AVOID PERSONAL INJURY OR DEATH, TURN THE IGNITION OFF, DISCONNECT THE BATTERY AND WAIT TWO MINUTES BEFORE PROCEEDING.** **WARNING: IF THE AIRBAG CONTROL MODULE IS DROPPED AT ANY TIME, IT MUST BE REPLACED. FAILURE TO TAKE THE PROPER PRECAUTIONS COULD RESULT IN ACCIDENTAL AIRBAG DEPLOYMENT AND PERSONAL INJURY OR DEATH.** If there are no possible causes remaining, view repair. Repair Replace the Airbag Control Module in accordance with Service Instructions. Perform AIRBAG VERIFICATION TEST - VER 1.	All

PASSENGER SQUIB 1 SHORT TO GROUND — Continued

TEST	ACTION	APPLICABILITY
5	**NOTE: Ensure the battery is fully charged.** With the DRBIII®, record and erase all DTCs from all modules. All active codes must be resolved before diagnosing any stored codes. Maintain a safe distance from all airbags while performing the following steps. With the DRBIII® monitor active codes as you work through the system. **NOTE: If equipped with Passenger Airbag On-Off switch, read the DTC's in all switch positions.** Wiggle the wiring harness and connectors of the appropriate airbag system and rotate the steering wheel from stop to stop. **NOTE: Check connectors - Clean and repair as necessary.** You have just attempted to simulate the condition that initially set the trouble code message. The following additional checks may assist you in identifying a possible intermittent problem: - Visually inspect related wire harness connectors. Look for broken, bent, pushed out, spread, corroded, or contaminated terminals. - Visually inspect the related harnesses. Look for chafed, pierced, pinched or partially broken wire. - Refer to Wiring Diagrams and Technical Service Bulletins that may apply. Did the DTC become active ? Yes → Select appropriate symptom from Symptom List. No → No problem found at this time. Erase all codes before returning vehicle to customer.	All

Symptom:
SEAT SQUIB CIRCUIT OPEN

When Monitored and Set Condition:

SEAT SQUIB CIRCUIT OPEN

When Monitored: With the ignition is On, the SIACM monitors the resistance of the Seat Squib circuits.

Set Condition: When the SIACM detects an open circuit or high resistance on the Seat Squib circuits.

POSSIBLE CAUSES
SEAT AIRBAG OPEN
SEAT SQUIB LINE 1 OR LINE 2 CIRCUIT OPEN
SIACM, SEAT SQUIB CIRCUIT OPEN
STORED CODE OR INTERMITTENT CONDITION
ACTIVE CODE PRESENT

TEST	ACTION	APPLICABILITY
1	Ensure the battery is fully charged. Turn the ignition on. **NOTE: For the purpose of this test, the AECM and ORC modules will be referred to as an ACM.** SELECT ONE: LEFT SIACM - ACTIVE DTC Go To 2 LEFT SIACM - STORED DTC Go To 4 RIGHT SIACM - ACTIVE DTC Go To 2 RIGHT SIACM - STORED DTC Go To 4 **NOTE: When reconnecting Airbag system components, the ignition must be turned off and the battery must be disconnected.**	All

SEAT SQUIB CIRCUIT OPEN — Continued

TEST	ACTION	APPLICABILITY
2	**WARNING: TURN IGNITION OFF, DISCONNECT THE BATTERY AND WAIT TWO MINUTES BEFORE PROCEEDING.** **WARNING: DO NOT PLACE AN INTACT UNDEPLOYED SEAT BACK PADDED SIDE DOWN ON A HARD SURFACE, THE AIRBAG WILL PROPEL INTO THE AIR IF ACCIDENTALLY DEPLOYED, AND COULD RESULT IN SERIOUS OR FATAL INJURY.** Disconnect the Seat Airbag connector. **NOTE: Check connectors - Clean and repair as necessary.** Connect the appropriate Load Tool to the Seat Airbag connector. **WARNING: TURN IGNITION ON, THEN RECONNECT THE BATTERY.** With the DRBIII®, read the SIACM active DTC's. Does the DRB show SEAT SQUIB CIRCUIT OPEN? Yes → Go To 3 No → Replace Seat Airbag in accordance with the Service Information. Perform AIRBAG VERIFICATION TEST - VER 1.	All
3	**WARNING: TURN IGNITION OFF, DISCONNECT THE BATTERY AND WAIT TWO MINUTES BEFORE PROCEEDING.** **WARNING: DO NOT PLACE AN INTACT UNDEPLOYED SEAT BACK PADDED SIDE DOWN ON A HARD SURFACE, THE AIRBAG WILL PROPEL INTO THE AIR IF ACCIDENTALLY DEPLOYED, AND COULD RESULT IN SERIOUS OR FATAL INJURY.** Disconnect the Airbag Load Tool Jumper. Disconnect the Side Impact Airbag Control Module Connector. **NOTE: Check connectors - Clean and repair as necessary.** Connect the appropriate Load Tool adaptor to the Side Impact Airbag Control Module connector. Measure the resistance of the Seat Squib Line 1 and Line 2 circuits between the Load Tool SIACM adaptor and the Seat Airbag connector. Is the resistance below 1.0 ohms on both circuits? Yes → Replace the Side Impact Airbag Control Module in accordance with the Service information. WARNING: IF THE SIDE IMPACT AIRBAG CONTROL MODULE IS DROPPED AT ANY TIME, IT MUST BE REPLACED. Perform AIRBAG VERIFICATION TEST - VER 1. No → Repair open or high resistance in the Seat Squib Line 1 or Line 2 circuits. Perform AIRBAG VERIFICATION TEST - VER 1.	All

SEAT SQUIB CIRCUIT OPEN — Continued

TEST	ACTION	APPLICABILITY
4	**NOTE: Ensure the battery is fully charged.** With the DRBIII®, record and erase all DTCs from all modules. All active codes must be resolved before diagnosing any stored codes. Maintain a safe distance from all airbags while performing the following steps. With the DRBIII® monitor active codes as you work through the system. **NOTE: If equipped with Passenger Airbag On-Off switch, read the DTC's in all switch positions.** Wiggle the wiring harness and connectors of the appropriate airbag system and rotate the steering wheel from stop to stop. **NOTE: Check connectors - Clean and repair as necessary.** You have just attempted to simulate the condition that initially set the trouble code message. The following additional checks may assist you in identifying a possible intermittent problem: - Visually inspect related wire harness connectors. Look for broken, bent, pushed out, spread, corroded, or contaminated terminals. - Visually inspect the related harnesses. Look for chafed, pierced, pinched or partially broken wire. - Refer to Wiring Diagrams and Technical Service Bulletins that may apply. Did the DTC become active ? Yes → Select appropriate symptom from Symptom List. No → No problem found at this time. Erase all codes before returning vehicle to customer.	All

Symptom:
SEAT SQUIB CIRCUIT SHORT

When Monitored and Set Condition:

SEAT SQUIB CIRCUIT SHORT

When Monitored: When the ignition is on, the SIACM monitors the resistance between the Seat Squib circuits.

Set Condition: When the SIACM detects a low resistance between the Seat Squib circuits.

POSSIBLE CAUSES
SEAT AIRBAG SHORT
SEAT SQUIB LINE 1 SHORT TO LINE 2
SIACM, SEAT SQUIB CIRCUIT SHORT
STORED CODE OR INTERMITTENT CONDITION
ACTIVE CODE PRESENT

TEST	ACTION	APPLICABILITY
1	Ensure the battery is fully charged. Turn the ignition on. **NOTE: For the purpose of this test, the AECM and ORC modules will be referred to as an ACM.** SELECT ONE: LEFT SIACM - ACTIVE DTC Go To 2 LEFT SIACM - STORED DTC Go To 4 RIGHT SIACM - ACTIVE DTC Go To 2 RIGHT SIACM - STORED DTC Go To 4 **NOTE: When reconnecting Airbag system components, the ignition must be turned off and the battery must be disconnected.**	All

SEAT SQUIB CIRCUIT SHORT — Continued

TEST	ACTION	APPLICABILITY
2	**WARNING: TURN THE IGNITION OFF, DISCONNECT THE BATTERY AND WAIT TWO MINUTES BEFORE PROCEEDING.** **WARNING: DO NOT PLACE AN INTACT UNDEPLOYED SEAT BACK PADDED SIDE DOWN ON A HARD SURFACE, THE AIRBAG WILL PROPEL INTO THE AIR IF ACCIDENTALLY DEPLOYED, AND COULD RESULT IN SERIOUS OR FATAL INJURY.** Disconnect the Seat Airbag connector. **NOTE: Check connectors - Clean repair as necessary.** Connect the appropriate Load Tool to the Seat Airbag connector. **WARNING: TURN IGNITION ON, THEN RECONNECT THE BATTERY.** With the DRB, read the SIACM active DTC's. Does the DRB show SEAT SQUIB CIRCUIT SHORT? Yes → Go To 3 No → Replace Seat Airbag in accordance with the Service Information. Perform AIRBAG VERIFICATION TEST - VER 1.	All
3	**WARNING: TURN THE IGNITION OFF, DISCONNECT THE BATTERY AND WAIT TWO MINUTES BEFORE PROCEEDING.** **WARNING: DO NOT PLACE AN INTACT UNDEPLOYED SEAT BACK PADDED SIDE DOWN ON A HARD SURFACE, THE AIRBAG WILL PROPEL INTO THE AIR IF ACCIDENTALLY DEPLOYED, AND COULD RESULT IN SERIOUS OR FATAL INJURY.** **NOTE: Check connectors - Clean and repair as necessary.** Connect the appropriate Load Tool adaptor to the SIACM connector. Disconnect the Side Impact Airbag Control Module connector Measure the resistance between the Seat Squib Line 1 and Line 2 circuits at the Seat Airbag connector. Is the resistance below 10K ohms? Yes → Repair Seat Squib Line 1 shorted to Line 2 circuit. Perform AIRBAG VERIFICATION TEST - VER 1. No → Replace the Side Impact Airbag Control Module in accordance with Service Instructions. WARNING: IF THE SIDE IMPACT AIRBAG CONTROL MODULE IS DROPPED AT ANY TIME, IT MUST BE REPLACED. Perform AIRBAG VERIFICATION TEST - VER 1.	All

SEAT SQUIB CIRCUIT SHORT — Continued

TEST	ACTION	APPLICABILITY
4	**NOTE: Ensure the battery is fully charged.** With the DRBIII®, record and erase all DTCs from all modules. All active codes must be resolved before diagnosing any stored codes. Maintain a safe distance from all airbags while performing the following steps. With the DRBIII® monitor active codes as you work through the system. **NOTE: If equipped with Passenger Airbag On-Off switch, read the DTC's in all switch positions.** Wiggle the wiring harness and connectors of the appropriate airbag system and rotate the steering wheel from stop to stop. **NOTE: Check connectors - Clean and repair as necessary.** You have just attempted to simulate the condition that initially set the trouble code message. The following additional checks may assist you in identifying a possible intermittent problem: - Visually inspect related wire harness connectors. Look for broken, bent, pushed out, spread, corroded, or contaminated terminals. - Visually inspect the related harnesses. Look for chafed, pierced, pinched or partially broken wire. - Refer to Wiring Diagrams and Technical Service Bulletins that may apply. Did the DTC become active ? Yes → Select appropriate symptom from Symptom List. No → No problem found at this time. Erase all codes before returning vehicle to customer.	All

Symptom:
SEAT SQUIB SHORT TO BATTERY

When Monitored and Set Condition:

SEAT SQUIB SHORT TO BATTERY

When Monitored: When the ignition is on, the SIACM monitors the voltage of the Seat Squib circuits.

Set Condition: When the SIACM detects high voltage on the Seat Squib circuits.

POSSIBLE CAUSES
SEAT AIRBAG SHORT TO BATTERY
SEAT SQUIB LINE 1 OR LINE 2 SHORTED TO BATTERY
SIACM, SEAT SQUIB SHORT TO BATTERY
STORED CODE OR INTERMITTENT CONDITION
ACTIVE CODE PRESENT

TEST	ACTION	APPLICABILITY
1	Turn the ignition on. Ensure the battery is fully charged. **NOTE: For the purpose of this test, the AECM and ORC modules will be referred to as an ACM.** SELECT ONE: LEFT SIACM - ACTIVE DTC Go To 2 LEFT SIACM - STORED DTC Go To 4 RIGHT SIACM - ACTIVE DTC Go To 2 RIGHT SIACM - STORED DTC Go To 4 **NOTE: When reconnecting Airbag system components, the ignition must be turned off and the battery must be disconnected.**	All

SEAT SQUIB SHORT TO BATTERY — Continued

TEST	ACTION	APPLICABILITY
2	**WARNING: TURN IGNITION OFF, DISCONNECT THE BATTERY AND WAIT TWO MINUTES BEFORE PROCEEDING.** **WARNING: DO NOT PLACE AN INTACT UNDEPLOYED SEAT BACK PADDED SIDE DOWN ON A HARD SURFACE, THE AIRBAG WILL PROPEL INTO THE AIR IF ACCIDENTALLY DEPLOYED, AND COULD RESULT IN SERIOUS OR FATAL INJURY.** Disconnect the Seat Airbag connector. **NOTE: Check connectors - Clean and repair as necessary.** Connect the appropriate Load Tool to the Seat Airbag connector. **WARNING: TURN IGNITION ON, THEN RECONNECT THE BATTERY.** With the DRBIII®, read SIACM active DTC's. Does the DRBIII® display SEAT SQUIB SHORT TO BATTERY? Yes → Go To 3 No → Replace Seat Airbag in accordance with the Service Information. Perform AIRBAG VERIFICATION TEST - VER 1.	All
3	**WARNING: TURN IGNITION OFF, DISCONNECT THE BATTERY AND WAIT TWO MINUTES BEFORE PROCEEDING.** **WARNING: DO NOT PLACE AN INTACT UNDEPLOYED SEAT BACK PADDED SIDE DOWN ON A HARD SURFACE, THE AIRBAG WILL PROPEL INTO THE AIR IF ACCIDENTALLY DEPLOYED, AND COULD RESULT IN SERIOUS OR FATAL INJURY.** Disconnect the Airbag Load Tool Jumper. Disconnect the Side Impact Airbag Control Module connector. **NOTE: Check connectors - Clean and repair as necessary.** Connect the appropriate Load Tool SIACM adaptor to the SIACM connector. **WARNING: TURN IGNITION ON, THEN RECONNECT THE BATTERY.** Measure the voltage of the Seat Squib Line 1 and Line 2 circuits between the Seat Airbag connector and ground. Is any voltage present on either circuit? Yes → Repair Seat Squib Line 1 or Line 2 shorted to battery. Perform AIRBAG VERIFICATION TEST - VER 1. No → Replace the Side Impact Airbag Control Module in accordance with Service Instructions. WARNING: IF THE SIDE IMPACT AIRBAG CONTROL MODULE IS DROPPED AT ANY TIME, IT MUST BE REPLACED. Perform AIRBAG VERIFICATION TEST - VER 1.	All

SEAT SQUIB SHORT TO BATTERY — Continued

TEST	ACTION	APPLICABILITY
4	**NOTE: Ensure the battery is fully charged.** With the DRBIII®, record and erase all DTCs from all modules. All active codes must be resolved before diagnosing any stored codes. Maintain a safe distance from all airbags while performing the following steps. With the DRBIII® monitor active codes as you work through the system. **NOTE: If equipped with Passenger Airbag On-Off switch, read the DTC's in all switch positions.** Wiggle the wiring harness and connectors of the appropriate airbag system and rotate the steering wheel from stop to stop. **NOTE: Check connectors - Clean and repair as necessary.** You have just attempted to simulate the condition that initially set the trouble code message. The following additional checks may assist you in identifying a possible intermittent problem: - Visually inspect related wire harness connectors. Look for broken, bent, pushed out, spread, corroded, or contaminated terminals. - Visually inspect the related harnesses. Look for chafed, pierced, pinched or partially broken wire. - Refer to Wiring Diagrams and Technical Service Bulletins that may apply. Did the DTC become active ? Yes → Select appropriate symptom from Symptom List. No → No problem found at this time. Erase all codes before returning vehicle to customer.	All

Symptom:
SEAT SQUIB SHORT TO GROUND

When Monitored and Set Condition:

SEAT SQUIB SHORT TO GROUND

When Monitored: When the ignition is on, the SIACM monitors the resistance of the Seat Squib circuits.

Set Condition: When the SIACM detects a short to ground on the Seat Squib circuits.

POSSIBLE CAUSES
SEAT AIRBAG SHORT TO GROUND
SEAT SQUIB LINE 1 OR LINE 2 SHORTED TO GROUND
SIACM, SEAT SQUIB SHORT TO GROUND
STORED CODE OR INTERMITTENT CONDITION
ACTIVE CODE PRESENT

TEST	ACTION	APPLICABILITY
1	Ensure the battery is fully charged. Turn the ignition on. **NOTE: For the purpose of this test, the AECM and ORC modules will be referred to as an ACM.** SELECT ONE: LEFT SIACM - ACTIVE DTC Go To 2 LEFT SIACM - STORED DTC Go To 4 RIGHT SIACM - ACTIVE DTC Go To 2 RIGHT SI ACM - STORED DTC Go To 4 **NOTE: When reconnecting Airbag system components, the ignition must be turned off and the battery must be disconnected.**	All

SEAT SQUIB SHORT TO GROUND — Continued

TEST	ACTION	APPLICABILITY
2	**WARNING: TURN IGNITION OFF, DISCONNECT THE BATTERY AND WAIT TWO MINUTES BEFORE PROCEEDING.** **WARNING: DO NOT PLACE AN INTACT UNDEPLOYED SEAT BACK PADDED SIDE DOWN ON A HARD SURFACE, THE AIRBAG WILL PROPEL INTO THE AIR IF ACCIDENTALLY DEPLOYED, AND COULD RESULT IN SERIOUS OR FATAL INJURY.** Disconnect the Seat Airbag connector. **NOTE: Check connectors - Clean and repair as necessary.** Connect the appropriate Load Tool to the Seat Airbag connector. **WARNING: TURN IGNITION ON, THEN RECONNECT THE BATTERY.** With the DRBIII®, read SIACM active DTC's. Does the DRBIII® display SEAT SQUIB SHORT TO GROUND? Yes → Go To 3 No → Replace the Seat Airbag in accordance with Service Instructions. Perform AIRBAG VERIFICATION TEST - VER 1.	All
3	**WARNING: TURN IGNITION OFF, DISCONNECT THE BATTERY AND WAIT TWO MINUTES BEFORE PROCEEDING.** **WARNING: DO NOT PLACE AN INTACT UNDEPLOYED SEAT BACK PADDED SIDE DOWN ON A HARD SURFACE, THE AIRBAG WILL PROPEL INTO THE AIR IF ACCIDENTALLY DEPLOYED, AND COULD RESULT IN SERIOUS OR FATAL INJURY.** Disconnect the Airbag Load Tool Jumper. Disconnect the Side Impact Airbag Control Module connector. **NOTE: Check connectors - Clean and repair as necessary.** Connect the appropriate Load Tool SIACM adaptor to the SIACM connector. Measure the resistance of the Seat Squib Line 1 and Line 2 circuits between the Curtain Squib connector and ground. Is the resistance below 10K ohms on either circuit? Yes → Repair Seat Squib Line 1 or Line 2 shorted to ground. Perform AIRBAG VERIFICATION TEST - VER 1. No → Replace the Side Impact Airbag Control Module in accordance with Service Instructions. WARNING: IF THE SIDE IMPACT AIRBAG CONTROL MODULE IS DROPPED AT ANY TIME, IT MUST BE REPLACED. Perform AIRBAG VERIFICATION TEST - VER 1.	All

SEAT SQUIB SHORT TO GROUND — Continued

TEST	ACTION	APPLICABILITY
4	**NOTE: Ensure the battery is fully charged.** With the DRBIII®, record and erase all DTCs from all modules. All active codes must be resolved before diagnosing any stored codes. Maintain a safe distance from all airbags while performing the following steps. With the DRBIII® monitor active codes as you work through the system. **NOTE: If equipped with Passenger Airbag On-Off switch, read the DTC's in all switch positions.** Wiggle the wiring harness and connectors of the appropriate airbag system and rotate the steering wheel from stop to stop. **NOTE: Check connectors - Clean and repair as necessary.** You have just attempted to simulate the condition that initially set the trouble code message. The following additional checks may assist you in identifying a possible intermittent problem: - Visually inspect related wire harness connectors. Look for broken, bent, pushed out, spread, corroded, or contaminated terminals. - Visually inspect the related harnesses. Look for chafed, pierced, pinched or partially broken wire. - Refer to Wiring Diagrams and Technical Service Bulletins that may apply. Did the DTC become active ? Yes → Select appropriate symptom from Symptom List. No → No problem found at this time. Erase all codes before returning vehicle to customer.	All

Symptom:
*AIRBAG INDICATOR ON WITHOUT ACM TROUBLE CODES

POSSIBLE CAUSES
INSTRUMENT CLUSTER PROBLEMS
ACM, INDICATOR ON NO CODES

TEST	ACTION	APPLICABILITY
1	Turn the ignition on. Make sure that all active DTC's have been repaired before performing this procedure. **WARNING: TO AVOID PERSONAL INJURY OR DEATH, TURN IGNITION OFF, DISCONNECT THE BATTERY AND WAIT TWO MINUTES BEFORE PROCEEDING.** Does the DRBIII® show LAMP REQ BY ACM: ON? Yes → Go To 2 No → Refer to INSTRUMENT CLUSTER CATEGORY symptom list for problems related to Instrument Cluster. Perform AIRBAG VERIFICATION TEST - VER 1. **NOTE: When reconnecting Airbag system components, the ignition must be turned off and the battery must be disconnected.**	All
2	**WARNING: TO AVOID PERSONAL INJURY OR DEATH, TURN IGNITION OFF, DISCONNECT THE BATTERY AND WAIT TWO MINUTES BEFORE PROCEEDING.** **WARNING: IF THE AIRBAG CONTROL MODULE IS DROPPED AT ANY TIME, IT MUST BE REPLACED. FAILURE TO TAKE THE PROPER PRECAUTIONS COULD RESULT IN ACCIDENTAL AIRBAG DEPLOYMENT AND PERSONAL INJURY OR DEATH.** If there are no possible causes remaining, view repair. Repair Replace the Airbag Control Module in accordance with the Service information. Perform AIRBAG VERIFICATION TEST - VER 1.	All

Symptom:
ALL OUTPUTS SHORT

When Monitored and Set Condition:

ALL OUTPUTS SHORT

When Monitored: Ignition in RUN and IOD fuse installed.

Set Condition: The radio has sensed a short on the output for more than 10 seconds.

POSSIBLE CAUSES
DETERMINE FAULT
FRONT SHORTED SPEAKER
I/P SHORTED SPEAKER
REAR SHORTED SPEAKER
(+) CIRCUIT SHORTED TO GROUND
(-) CIRCUIT SHORTED TO GROUND
SPEAKER (+) & (-) CIRCUITS SHORTED TOGETHER
SPEAKER SECTION OF RADIO

TEST	ACTION	APPLICABILITY
1	Turn the ignition on. Turn the Radio on. With the DRBIII®, erase the audio DTC's. Cycle the ignition switch from off to on and wait 10 seconds. With the DRBIII®, read the audio DTC's. Does the DRBIII® display ALL OUTPUTS SHORT? Yes → Go To 2 No → Refer to the wiring diagrams located in the service information to help isolate a possible intermittent short. Perform BODY VERIFICATION TEST - VER 1.	All

ALL OUTPUTS SHORT — Continued

TEST	ACTION	APPLICABILITY
2	Turn the ignition off. **NOTE: Perform this procedure after disconnecting each front speaker connector.** Disconnect each front speaker harness connector one at a time. Turn the ignition on. Turn the radio on. With the DRBIII®, erase the audio DTCs. Cycle the ignition switch from off to on and wait 10 seconds. With the DRBIII®, read DTC's. Does the DRBIII® display ALL OUTPUTS SHORT with all the front speakers disconnected? Yes → Go To 3 No → Replace the Speaker that when disconnected the DTC did not reset. Perform BODY VERIFICATION TEST - VER 1.	All
3	Turn the ignition off. **NOTE: Perform this procedure after disconnecting each I/P speaker connector.** Disconnect each I/P speaker harness connector one at a time. Turn the ignition on. Turn the radio on. With the DRBIII®, erase the audio DTCs. Cycle the ignition switch from off to on and wait 10 seconds. With the DRBIII®, read DTC's. Does the DRBIII® display ALL OUTPUTS SHORT with all the I/P speakers disconnected? Yes → Go To 4 No → Replace the Speaker that when disconnected the DTC did not reset. Perform BODY VERIFICATION TEST - VER 1.	All
4	Turn the ignition off. **NOTE: Perform this procedure after disconnecting each rear speaker connector.** Disconnect each rear speaker harness connector one at a time. Turn the ignition on. Turn the radio on. With the DRBIII®, erase the audio DTCs. Cycle the ignition switch from off to on and wait 10 seconds. With the DRBIII®, read DTC's. Does the DRBIII® display ALL OUTPUTS SHORT with all the rear speakers disconnected? Yes → Go To 5 No → Replace the Speaker that when disconnected the DTC did not reset. Perform BODY VERIFICATION TEST - VER 1.	All

ALL OUTPUTS SHORT — Continued

TEST	ACTION	APPLICABILITY
5	Turn the ignition off. Disconnect each front, I/P and rear speaker harness connector. Disconnect the Radio C1 harness connector. Measure the resistance between ground and each speaker (+) circuit. Is the resistance below 1000.0 (1K) ohms? Yes → Repair the speaker (+) circuit for a short to ground. Perform BODY VERIFICATION TEST - VER 1. No → Go To 6	All
6	Turn the ignition off. Disconnect each front, I/P and rear speaker harness connector. Disconnect the Radio C1 harness connector. Measure the resistance between ground and each speaker (-) circuit. Is the resistance below 1000.0 (1K) ohms? Yes → Repair the speaker (-) circuit for a short to ground. Perform BODY VERIFICATION TEST - VER 1. No → Go To 7	All
7	Turn the ignition off. Disconnect each front, I/P and rear speaker harness connector. Disconnect the Radio C1 harness connector. Measure the resistance between each speaker (+) circuit and each speaker (-) circuit. Is the resistance below 1000.0 (1K) ohms for any of the measurements? Yes → Repair the speaker circuits shorted together. Perform BODY VERIFICATION TEST - VER 1. No → Go To 8	All
8	If there are no possible causes remaining, view repair. Repair Replace the Radio. Perform BODY VERIFICATION TEST - VER 1.	All

Symptom List:

CASSETTE PLAYER INOP
CD MECHANICAL FAILURE
NO PCI TRANSMISSION
***AM/FM SWITCH INOPERATIVE**
***ANY STATION PRESET SWITCH INOPERATIVE**
***BALANCE INOPERATIVE**
***CD EJECT SWITCH INOPERATIVE**
***EQUALIZER INOPERATIVE**
***FADER INOPERATIVE**
***FF/RW SWITCH INOPERATIVE**
***HOUR/MINUTE SWITCHES INOPERATIVE**
***PAUSE/PLAY SWITCH INOPERATIVE**
***PWR SWITCH INOPERATIVE**
***SCAN SWITCH INOPERATIVE**
***SEEK SWITCH INOPERATIVE**
***SET SWITCH INOPERATIVE**
***TAPE EJECT SWITCH INOPERATIVE**
***TIME SWITCH INOPERATIVE**
***TUNE SWITCH INOPERATIVE**

Test Note: All symptoms listed above are diagnosed using the same tests. The title for the tests will be CASSETTE PLAYER INOP.

When Monitored and Set Condition:

CASSETTE PLAYER INOP

When Monitored: Continuously with the ignition and radio turned on.

Set Condition: The code will set if the radio detects a internal cassette failure.

CD MECHANICAL FAILURE

When Monitored: Continuously with the ignition and CD player turned on.

Set Condition: The code will set if the radio detects a CD mechanical failure.

POSSIBLE CAUSES
INTERNAL FAILURE

CASSETTE PLAYER INOP — Continued

TEST	ACTION	APPLICABILITY
1	**NOTE: If a DTC is set, erase the DTC and attempt to reset the DTC. If DTC resets, follow this test.** This is an internal radio failure. View repair Repair Replace the Radio. Perform BODY VERIFICATION TEST - VER 1.	All

Symptom:
CD CHANGER MECHANICAL FAILURE

When Monitored and Set Condition:

CD CHANGER MECHANICAL FAILURE

When Monitored: Continuously with the ignition and CD Changer turned on.

Set Condition: The code will set if the CD Changer detects a mechanical failure.

POSSIBLE CAUSES
INTERNAL FAILURE

TEST	ACTION	APPLICABILITY
1	**NOTE: Erase DTC and attempt to reset. If DTC resets, follow this test.** This is an internal CD Changer failure. View repair Repair Replace the CD Changer. Perform BODY VERIFICATION TEST - VER 1.	All

Symptom:
CD CHANGER READ FAILURE

When Monitored and Set Condition:

CD CHANGER READ FAILURE

When Monitored: Continuously with the ignition and CD Changer turned on.

Set Condition: The code will set if a CD that is not formatted as a music CD is installed in the CD Changer.

POSSIBLE CAUSES
CD CHANGER READ FAILURE

TEST	ACTION	APPLICABILITY
1	Replace the problem CD with a good, clean, unscratched, music CD. Turn the radio on and select the good CD. With the DRBIII®, read DTC's. Does the DRBIII® display CD CHANGER READ FAILURE? Yes → Replace the CD Changer. Perform BODY VERIFICATION TEST - VER 1. No → Test Complete.	All

Symptom:
CD CHANGER TEMPERATURE HIGH

When Monitored and Set Condition:

CD CHANGER TEMPERATURE HIGH

When Monitored: Continuously with the ignition and CD Changer turned on.

Set Condition: The code will set if the temperature inside the CD Changer is above +65° C (+145° F).

POSSIBLE CAUSES
HIGH TEMPERATURE FAILURE

TEST	ACTION	APPLICABILITY
1	With the DRBIII®, erase the audio DTC's. Start the engine and allow the engine to reach normal operating temperature. If the vehicle has been in the hot sunlight or extreme cold move the vehicle indoors and open the doors to allow the inside temperature to stabilize. The CD Changer will operate between -23° C and 65° C (-10° F and +145° F). With the DRBIII®, read DTC's. Does the DRBIII® display CD CHANGER TEMPERATURE HIGH? Yes → Replace the CD Changer. Perform BODY VERIFICATION TEST - VER 1. No → Test Complete.	All

Symptom:
CD PLAY FAILURE

When Monitored and Set Condition:

CD PLAY FAILURE

When Monitored: Continuously with the ignition and the radio CD player turned on.

Set Condition: The code will set if a CD that is not formatted as a music CD or is scratched, dirty so the radio can not play the CD.

POSSIBLE CAUSES
CD PLAY FAILURE

TEST	ACTION	APPLICABILITY
1	Replace the problem CD with a good, clean, unscratched, music CD. Turn the radio CD player on. With the DRBIII®, read DTC's. Does the DRBIII® display CD PLAY FAILURE? Yes → Replace the Radio. Perform BODY VERIFICATION TEST - VER 1. No → Test Complete.	All

Symptom:
CD READ FAILURE

When Monitored and Set Condition:

CD READ FAILURE

When Monitored: Continuously with the ignition and the radio CD player turned on.

Set Condition: The code will set if a CD that is not formatted as a music CD is installed in the radio CD player.

POSSIBLE CAUSES
CD READ FAILURE

TEST	ACTION	APPLICABILITY
1	Replace the problem CD with a good, clean, unscratched, music CD. Turn the radio CD player on. With the DRBIII®, read DTC's. Does the DRBIII® display CD READ FAILURE? Yes → Replace the Radio. Perform BODY VERIFICATION TEST - VER 1. No → Test Complete.	All

Symptom:
CD TEMPERATURE HIGH

When Monitored and Set Condition:

CD TEMPERATURE HIGH

When Monitored: Continuously with the ignition and the radio CD player turned on.

Set Condition: The code will set if the temperature inside the radio CD player is above +85° C (+185° F).

POSSIBLE CAUSES
HIGH TEMPERATURE FAILURE

TEST	ACTION	APPLICABILITY
1	With the DRBIII®, erase the audio DTC's. Start the engine and allow the engine to reach normal operating temperature. If the vehicle has been in the hot sunlight or extreme cold move the vehicle indoors and open the doors to allow the inside temperature to stabilize. The radio CD player will operate between -30° C and 85° C (-22° F and +185° F). With the DRBIII®, read DTC's. Does the DRBIII® display CD TEMPERATURE HIGH? Yes → Replace the Radio. Perform BODY VERIFICATION TEST - VER 1. No → Test Complete.	All

Symptom:
LOW VOLTAGE LEVEL

When Monitored and Set Condition:

LOW VOLTAGE LEVEL

When Monitored:

Set Condition: The radio detects lower than normal voltage.

POSSIBLE CAUSES
CHECK CHARGING SYSTEM
CHECK VOLTAGE LEVEL AT RADIO
RADIO

TEST	ACTION	APPLICABILITY
1	Check the charging system in accordance with the service information. Is the charging system operating properly? Yes → Go To 2 No → Refer to the appropriate service information and repair as necessary. Perform BODY VERIFICATION TEST - VER 1.	All
2	Turn the ignition off. Disconnect the Radio harness connector. Start the engine. Measure the voltage of each Fused B+ circuit and the Fused Ignition Switch Output circuit. Is the voltage above or approximately 14 volts for each measurement? Yes → Go To 3 No → Repair the circuit for high resistance. Perform BODY VERIFICATION TEST - VER 1.	All
3	**Note: Reconnect all previously disconnected components.** Turn the ignition and Radio on. With the DRBIII®, erase the audio DTC's. Start the engine. With the DRBIII®, read the audio DTC's. Did this DTC reset? Yes → Replace the Radio. Perform BODY VERIFICATION TEST - VER 1. No → Test Complete.	All

Symptom:
NO ANTENNA CONNECTION

When Monitored and Set Condition:

NO ANTENNA CONNECTION

When Monitored: With the ignition on and the radio in seek up/down mode.

Set Condition: With the radio in seek or scan mode for two minutes and the radio does not detect an antenna connection or does not receive a radio station signal.

POSSIBLE CAUSES
BAD ANTENNA CONNECTION
TEST ANTENNA
RADIO

TEST	ACTION	APPLICABILITY
1	Turn the ignition off. Disconnect the Radio Antenna connector. Inspect the Radio Antenna connection. Was the Antenna connection clean and tight? Yes → Go To 2 No → Repair Antenna connection as needed. Perform BODY VERIFICATION TEST - VER 1.	All
2	Refer to the Audio System in the service information and test the Antenna in accordance with the service procedure. Is the Antenna ok? Yes → Go To 3 No → Repair or replace the Antenna assembly as necessary. Perform BODY VERIFICATION TEST - VER 1.	All
3	**NOTE: Reconnect all previously disconnected components.** Turn the ignition and Radio on. **NOTE: Move vehicle outside approximately 30ft from any structure.** With the DRBIII®, erase the audio DTC's, put the radio in seek up and seek down mode for approximately 2 minutes before proceeding. With the DRBIII®, read the audio DTC's. Did this DTC reset? Yes → Replace the Radio. Perform BODY VERIFICATION TEST - VER 1. No → Test Complete.	All

Symptom:
POWER AMP SHUTDOWN

When Monitored and Set Condition:

POWER AMP SHUTDOWN

When Monitored: Ignition in RUN and IOD fuse installed.

Set Condition: The radio has sensed a short on the output for more than 10 seconds.

POSSIBLE CAUSES
DETERMINE FAULT
FRONT SHORTED SPEAKER
I/P SHORTED SPEAKER
REAR SHORTED SPEAKER
(+) CIRCUIT SHORTED TO GROUND
(-) CIRCUIT SHORTED TO GROUND
SPEAKER (+) & (-) CIRCUITS SHORTED TOGETHER
SPEAKER SECTION OF RADIO

TEST	ACTION	APPLICABILITY
1	Turn the ignition on. Turn the Radio on. With the DRBIII®, erase the audio DTC's. Cycle the ignition switch from off to on and wait 10 seconds. With the DRBIII®, read the audio DTC's. Does the DRBIII® display POWER AMP SHUTDOWN? Yes → Go To 2 No → Refer to the wiring diagrams located in the service information to help isolate a possible intermittent short. Perform BODY VERIFICATION TEST - VER 1.	All

POWER AMP SHUTDOWN — Continued

TEST	ACTION	APPLICABILITY
2	Turn the ignition off. **NOTE: Perform this procedure after disconnecting each front speaker connector.** Disconnect each front speaker harness connector one at a time. Turn the ignition on. Turn the radio on. With the DRBIII®, erase the audio DTCs. Cycle the ignition switch from off to on and wait 10 seconds. With the DRBIII®, read DTC's. Does the DRBIII® display POWER AMP SHUTDOWN with all the front speakers disconnected? Yes → Go To 3 No → Replace the Speaker that when disconnected the DTC did not reset. Perform BODY VERIFICATION TEST - VER 1.	All
3	Turn the ignition off. **NOTE: Perform this procedure after disconnecting each I/P speaker connector.** Disconnect each I/P speaker harness connector one at a time. Turn the ignition on. Turn the radio on. With the DRBIII®, erase the audio DTCs. Cycle the ignition switch from off to on and wait 10 seconds. With the DRBIII®, read DTC's. Does the DRBIII® display POWER AMP SHUTDOWN with all the I/P speakers disconnected? Yes → Go To 4 No → Replace the Speaker that when disconnected the DTC did not reset. Perform BODY VERIFICATION TEST - VER 1.	All
4	Turn the ignition off. **NOTE: Perform this procedure after disconnecting each rear speaker connector.** Disconnect each rear speaker harness connector one at a time. Turn the ignition on. Turn the radio on. With the DRBIII®, erase the audio DTCs. Cycle the ignition switch from off to on and wait 10 seconds. With the DRBIII®, read DTC's. Does the DRBIII® display POWER AMP SHUTDOWN with all the rear speakers disconnected? Yes → Go To 5 No → Replace the Speaker that when disconnected the DTC did not reset. Perform BODY VERIFICATION TEST - VER 1.	All

POWER AMP SHUTDOWN — Continued

TEST	ACTION	APPLICABILITY
5	Turn the ignition off. Disconnect each front, I/P and rear speaker harness connector. Disconnect the Radio C1 harness connector. Measure the resistance between ground and each speaker (+) circuit. Is the resistance below 1000.0 (1K) ohms? Yes → Repair the speaker (+) circuit for a short to ground. Perform BODY VERIFICATION TEST - VER 1. No → Go To 6	All
6	Turn the ignition off. Disconnect each front, I/P and rear speaker harness connector. Disconnect the Radio C1 harness connector. Measure the resistance between ground and each speaker (-) circuit. Is the resistance below 1000.0 (1K) ohms? Yes → Repair the speaker (-) circuit for a short to ground. Perform BODY VERIFICATION TEST - VER 1. No → Go To 7	All
7	Turn the ignition off. Disconnect each front, I/P and rear speaker harness connector. Disconnect the Radio C1 harness connector. Measure the resistance between each speaker (+) circuit and each speaker (-) circuit. Is the resistance below 1000.0 (1K) ohms for any of the measurements? Yes → Repair the speaker circuits shorted together. Perform BODY VERIFICATION TEST - VER 1. No → Go To 8	All
8	If there are no possible causes remaining, view repair. Repair Replace the Radio. Perform BODY VERIFICATION TEST - VER 1.	All

Symptom:

***NO RESPONSE FROM ACM**

POSSIBLE CAUSES
CHECKING FOR VOLTAGE AT ACM
GROUND CIRCUIT OPEN
PCI BUS CIRCUIT OPEN
AIRBAG CONTROL MODULE

TEST	ACTION	APPLICABILITY
1	Ensure that the battery is fully charged. **WARNING: TO AVOID PERSONAL INJURY OR DEATH, TURN THE IGNITION OFF, DISCONNECT THE BATTERY AND WAIT TWO MINUTES BEFORE PROCEEDING.** Disconnect the ACM harness connector. Connect the appropriate Load Tool ACM Adapter to the ACM connector. Turn the ignition on and then reconnect the Battery. Using a 12-volt test light connected to ground, probe the Fused Ignition Switch Output (Run) Circuit and the Fused Ignition Switch Output (Run/Start) Circuit at the ACM connector. NOTE: One open circuit will not cause a NO RESPONSE condition. Is the test light illuminated on both circuits? Yes → Go To 2 No → Repair the Fused Ignition Switch Output (Run) and Fused Ignition Switch Output (Run/Start) circuits for an open. Perform AIRBAG VERIFICATION TEST - VER 1. **NOTE: When reconnecting airbag system components, the ignition must be turned off and the battery must be disconnected.**	All
2	**Ensure that the battery is fully charged.** **WARNING: TO AVOID PERSONAL INJURY OR DEATH, TURN THE IGNITION OFF, DISCONNECT THE BATTERY AND WAIT TWO MINUTES BEFORE PROCEEDING.** Disconnect the ACM harness connector. Connect the appropriate Load Tool ACM Adapter to the ACM connector. Using a 12-volt test light connected to 12-volts, probe the ground circuit. **NOTE: Make sure test light is connected to the Battery positive terminal.** Is the test light illuminated? Yes → Go To 3 No → Repair the Ground circuit for an open. Perform AIRBAG VERIFICATION TEST - VER 1. **When reconnecting Airbag system components, the ignition must be turned off and the battery must be disconnected.**	All

*NO RESPONSE FROM ACM — Continued

TEST	ACTION	APPLICABILITY
3	**Note: Ensure there is PCI bus communication with other modules. If not, refer to the PCI Bus Communication Failure symptom and repair as necessary.** **WARNING: TO AVOID PERSONAL INJURY OR DEATH, TURN THE IGNITION OFF, DISCONNECT THE BATTERY AND WAIT TWO MINUTES BEFORE PROCEEDING.** Disconnect the ACM harness connector. Connect the appropriate Load Tool ACM Adapter to the ACM connector. Turn the ignition on and then reconnect the Battery. Use Scope input cable CH7058, Cable to Probe adapter CH7062, and the red and black test probes. Connect the scope input cable to the channel one connector on the DRB. Attach the red and black leads and the cable to probe adapter to the scope input cable. With the DRBIII® select Pep Module Tools. Select lab scope. Select Live Data. Select 12 volt square wave. Press F2 for Scope. Press F2 and use the down arrow to set voltage range to 20 volts. Press F2 again when complete. Connect the Black lead to the chassis ground. Connect the Red lead to the PCI Bus circuit in the ACM connector. Observe the voltage display on the DRB Lab Scope. Does the voltage pulse from 0 to approximately 7.5 volts? Yes → Go To 4 No → Repair the PCI Bus circuit for an open. Perform AIRBAG VERIFICATION TEST - VER 1.	All
4	If there are no possible causes remaining, view repair. Repair Replace the Airbag Control Module (ACM) in accordance with the Service lnformation. WARNING: To avoid personal injury or death, make sure the battery is disconnected and wait 2 minutes before proceeding. Perform AIRBAG VERIFICATION TEST - VER 1.	All

Symptom:

*NO RESPONSE FROM COMPASS/TEMPERATURE MIRROR

POSSIBLE CAUSES
OPEN GROUND CIRCUIT
OPEN FUSED B+ CIRCUIT
OPEN FUSED IGNITION SWITCH OUTPUT CIRCUIT
OPEN PCI BUS CIRCUIT
COMPASS/TEMPERATURE MIRROR

TEST	ACTION	APPLICABILITY
1	Turn the ignition off. Turn all lights off. Disconnect the Compass/Temperature Mirror harness connector. Using a 12-volt test light connected to 12-volts, probe each ground circuit. Is the test light illuminated for both circuits? Yes → Go To 2 No → Repair the ground circuit for an open. Perform BODY VERIFICATION TEST - VER 1.	All
2	Turn the ignition off. Disconnect the Compass/Temperature Mirror harness connector. Using a 12-volt test light connected to ground, probe the Fused B+ circuit. Is the test light illuminated? Yes → Go To 3 No → Repair the Fused B+ circuit for an open. Refer to the wiring diagrams in the service information. Perform BODY VERIFICATION TEST - VER 1.	All
3	Turn the ignition off. Disconnect the Compass/Temperature Mirror harness connector. Turn the ignition on. Using a 12-volt test light connected to ground, probe the Fused Ignition Switch Output circuit. Is the test light illuminated? Yes → Go To 4 No → Repair the Fused Ignition Switch Output circuit for an open. Refer to the wiring diagrams in the service information. Perform BODY VERIFICATION TEST - VER 1.	All

*NO RESPONSE FROM COMPASS/TEMPERATURE MIRROR — Continued

TEST	ACTION	APPLICABILITY
4	**Note: Ensure there is PCI Bus communication with other modules on the vehicle before proceeding. If not, refer to the symptom list from the menu and repair as necessary.** Disconnect the Compass/Temperature Mirror harness connector. Use Scope input cable CH7058, Cable to Probe adapter CH7062, and the red and black test probes. Connect the scope input cable to the channel one connector on the DRB. Attach the red and black leads and the cable to probe adapter to the scope input cable. With the DRBIII® select Pep Module Tools. Select lab scope. Select Live Data. Select 12 volt square wave. Press F2 for Scope. Press F2 and use the down arrow to set voltage range to 20 volts. Set Probe to x10. Press F2 again when complete. Connect the Black lead to the chassis ground. Connect the Red lead to the PCI Bus circuit in the Compass/Temperature Mirror connector. Turn the ignition on. Observe the voltage display on the DRB Lab Scope. Does the voltage pulse from 0 to approximately 7.5 volts? Yes → Replace the Compass/Temperature Mirror in accordance with the service information. Perform BODY VERIFICATION TEST - VER 1. No → Repair the PCI Bus circuit for an open. Perform BODY VERIFICATION TEST - VER 1.	All

Symptom:
*NO RESPONSE FROM CONTROLLER ANTILOCK BRAKE

POSSIBLE CAUSES
NO RESPONSE FROM CAB
GROUND CIRCUIT OPEN
OPEN FUSED IGNITION SWITCH OUTPUT CIRCUIT
OPEN PCI BUS CIRCUIT
CONTROLLER ANTILOCK BRAKE

TEST	ACTION	APPLICABILITY
1	Turn the ignition on. **Note: As soon as one or more module communicates with the DRB, answer the question.** With the DRB, attempt to communicate with the Airbag Control Module (ACM). With the DRB, attempt to communicate with the Instrument Cluster (MIC). Was the DRB able to I/D or establish communications with either of the modules? Yes → Go To 2 No → Refer to the Communications category and perform the symptom PCI Bus Communication Failure. Perform ABS VERIFICATION TEST - VER 1.	All
2	Turn the ignition off. Disconnect the CAB harness connector. Using a 12-volt test light connected to 12-volts, probe both ground circuits. Is the test light illuminated for both circuits? Yes → Go To 3 No → Repair the ground circuit(s) for an open. Perform ABS VERIFICATION TEST - VER 1.	All
3	Turn the ignition off. Disconnect the CAB harness connector. Turn the ignition on. Using a 12-volt test light connected to ground, probe the Fused Ignition Switch Output circuit. Is the test light illuminated? Yes → Go To 4 No → Repair the Fused Ignition Switch Output circuit for an open. Perform ABS VERIFICATION TEST - VER 1.	All

*NO RESPONSE FROM CONTROLLER ANTILOCK BRAKE — Continued

TEST	ACTION	APPLICABILITY
4	**Note: Ensure there is PCI Bus communication with other modules on the vehicle before proceeding. If not, refer to the symptom list from the menu and repair as necessary.** Disconnect the CAB harness connector. Use Scope input cable CH7058, Cable to Probe adapter CH7062, and the red and black test probes. Connect the scope input cable to the channel one connector on the DRB. Attach the red and black leads and the cable to probe adapter to the scope input cable. With the DRBIII® select Pep Module Tools. Select lab scope. Select Live Data. Select 12 volt square wave. Press F2 for Scope. Press F2 and use the down arrow to set voltage range to 20 volts. Press F2 again when complete. Connect the Black lead to the chassis ground. Connect the Red lead to the PCI Bus circuit in the CAB connector. Turn the ignition on. Observe the voltage display on the DRB Lab Scope. Does the voltage pulse from 0 to approximately 7.5 volts? Yes → Go To 5 No → Repair the PCI Bus circuit for an open. Perform ABS VERIFICATION TEST - VER 1.	All
5	If there are no possible causes remaining, view repair. Repair Replace the Controller Antilock Brake in accordance with the Service Information. Perform ABS VERIFICATION TEST - VER 1.	All

Symptom:

***NO RESPONSE FROM INSTRUMENT CLUSTER**

POSSIBLE CAUSES
OPEN GROUND CIRCUIT
OPEN FUSED B+ CIRCUIT
OPEN FUSED IGNITION SWITCH OUTPUT CIRCUIT
OPEN PCI BUS CIRCUIT
INSTRUMENT CLUSTER

TEST	ACTION	APPLICABILITY
1	Turn the ignition off. Turn all lights off. Disconnect the Instrument Cluster harness connector. Using a 12-volt test light connected to 12-volts, probe the ground circuit. Is the test light illuminated? Yes → Go To 2 No → Repair the ground circuit for an open. Perform BODY VERIFICATION TEST - VER 1.	All
2	Turn the ignition off. Disconnect the Instrument Cluster harness connector. Using a 12-volt test light connected to ground, probe the Fused B+ circuit. Is the test light illuminated? Yes → Go To 3 No → Repair the Fused B+ circuit for an open. Refer to the wiring diagrams in the service information. Perform BODY VERIFICATION TEST - VER 1.	All
3	Turn the ignition off. Disconnect the Instrument Cluster harness connector. Turn the ignition on. Using a 12-volt test light connected to ground, probe the Fused Ignition Switch Output circuit. Is the test light illuminated? Yes → Go To 4 No → Repair the Fused Ignition Switch Output circuit for an open. Refer to the wiring diagrams in the service information. Perform BODY VERIFICATION TEST - VER 1.	All

*NO RESPONSE FROM INSTRUMENT CLUSTER — Continued

TEST	ACTION	APPLICABILITY
4	**Note: Ensure there is PCI Bus communication with other modules on the vehicle before proceeding. If not, refer to the symptom list from the menu and repair as necessary.** Disconnect the Instrument Cluster harness connector. Use Scope input cable CH7058, Cable to Probe adapter CH7062, and the red and black test probes. Connect the scope input cable to the channel one connector on the DRB. Attach the red and black leads and the cable to probe adapter to the scope input cable. With the DRBIII® select Pep Module Tools. Select lab scope. Select Live Data. Select 12 volt square wave. Press F2 for Scope. Press F2 and use the down arrow to set voltage range to 20 volts. Press F2 again when complete. Connect the Black lead to the chassis ground. Connect the Red lead to the PCI Bus circuit in the Instrument Cluster connector. Turn the ignition on. Observe the voltage display on the DRB Lab Scope. Does the voltage pulse from 0 to approximately 7.5 volts? Yes → Replace the Instrument Cluster in accordance with the service information. Perform BODY VERIFICATION TEST - VER 1. No → Repair the PCI Bus circuit for an open. Perform BODY VERIFICATION TEST - VER 1.	All

Symptom:
*NO RESPONSE FROM LEFT SIACM

POSSIBLE CAUSES
INTERROGATE ACM
GROUND CIRCUIT OPEN
FUSED IGNITION SWITCH OUTPUT CIRCUIT (RUN/START) OPEN
PCI BUS CIRCUIT OPEN
LEFT SIDE IMPACT AIRBAG CONTROL MODULE

TEST	ACTION	APPLICABILITY
1	Turn the ignition on. With the DRBIII® select Passive Restraints. With the DRBIII® select Airbag and read the active DTC's. Is the Loss Of Ignition Run/Start DTC set? Yes → Refer to the symptom list and perform the Loss Of Ignition Run/Start symptom. Perform AIRBAG VERIFICATION TEST - VER 1. No → Go To 2	All
2	**Ensure that the battery is fully charged.** **Warning: TURN IGNITION OFF, DISCONNECT THE BATTERY AND WAIT TWO MINUTES BEFORE PROCEEDING.** Disconnect the Left Side Impact Airbag Control Module harness connector. Connect the appropriate Load Tool SIACM Adapter to the SIACM connector. Using a 12-volt test light connected to 12-volts, probe the ground circuit. **NOTE: Make sure test light is connected to the Battery positive terminal.** Is the test light illuminated? Yes → Go To 3 No → Repair the Ground circuit for an open. Perform AIRBAG VERIFICATION TEST - VER 1. **Note: When reconnecting Airbag system components, the ignition must be turned off and the battery must be disconnected.**	All
3	**Warning: TURN IGNITION OFF, DISCONNECT THE BATTERY AND WAIT TWO MINUTES BEFORE PROCEEDING.** Disconnect the Left Side Impact Airbag Control Module harness connector. Connect the appropriate Load Tool SIACM Adapter to the SIACM connector. Turn the ignition on and then reconnect the Battery. Measure the voltage of the Fused Ignition Switch Output (Run/Start) circuit. Is the voltage above 6.0 volts? Yes → Go To 4 No → Repair the Fused Ignition Switch Output (Run/Start) circuit for an open. Perform AIRBAG VERIFICATION TEST - VER 1. **Note: When reconnecting Airbag system components, the ignition must be turned off and the battery must be disconnected.**	All

*NO RESPONSE FROM LEFT SIACM — Continued

TEST	ACTION	APPLICABILITY
4	**NOTE: Ensure there is PCI bus communication with other modules. If not, refer to the PCI Bus Communication Failure symptom and repair as necessary.** **WARNING: TURN THE IGNITION OFF, DISCONNECT THE BATTERY AND WAIT TWO MINUTES BEFORE PROCEEDING.** Disconnect the Left Side Impact Airbag Control Module harness connector. Connect the appropriate Load Tool SIACM Adapter to the SIACM connector. Turn the ignition on and then reconnect the Battery. Use Scope input cable CH7058, Cable to Probe adapter CH7062, and the red and black test probes. Connect the scope input cable to the channel one connector on the DRB. Attach the red and black leads and the cable to probe adapter to the scope input cable. With the DRBIII® select Pep Module Tools. Select lab scope. Select Live Data. Select 12 volt square wave. Press F2 for Scope. Press F2 and use the down arrow to set voltage range to 20 volts. Set Probe to x10. Press F2 again when complete. Connect the Black lead to the chassis ground. Connect the Red lead to the PCI Bus circuit in the Left Side Impact Airbag Control Module connector. Observe the voltage display on the DRB Lab Scope. Does the voltage pulse from 0 to approximately 7.5 volts? Yes → Go To 5 No → Repair the PCI Bus circuit for an open. Perform AIRBAG VERIFICATION TEST - VER 1.	All
5	If there are no possible causes remaining, view repair. Yes → Replace the Left Side Impact Airbag Control Module (LSIACM) in accordance with the Service Information. WARNING: Make sure the battery is disconnected and wait 2 minutes before proceeding. Perform AIRBAG VERIFICATION TEST - VER 1.	All

Symptom:
*NO RESPONSE FROM PCM (PCI BUS) - NGC

POSSIBLE CAUSES
PCM PCI NO RESPONSE
POWERTRAIN CONTROL MODULE
PCI BUS CIRCUIT OPEN

TEST	ACTION	APPLICABILITY
1	Turn the ignition on. **NOTE: As soon as one or more module communicates with the DRB, answer the question.** With the DRB, enter Anti-Lock Brakes. With the DRB, enter Electro/Mechanical Cluster (MIC). With the DRB, enter Passive Restraints then Airbag. Were you able to establish communications with any of the modules? Yes → Go To 2 No → Refer to symptom PCI Bus Communication Failure in the Communications category. Perform POWERTRAIN VERIFICATION TEST VER - 1.	All
2	With the DRB read the Powertrain DTC's. This is to ensure power and grounds to the PCM are operational. **NOTE: If the DRB will not read PCM DTC's, follow the NO RESPONSE TO PCM (PCM SCI only) symptom path.** Turn the ignition off. Disconnect the PCM harness connectors. **CAUTION: DO NOT PROBE THE PCM HARNESS CONNECTORS. PROBING THE PCM HARNESS CONNECTORS WILL DAMAGE THE PCM TERMINALS RESULTING IN POOR TERMINAL TO PIN CONNECTION. INSTALL MILLER SPECIAL TOOL #8815 TO PERFORM DIAGNOSIS.** Use Scope input cable CH7058, Cable to Probe adapter CH7062, and the red and black test probes. Connect the scope input cable to the channel one connector on the DRB. Attach the red and black leads and the cable to probe adapter to the scope input cable. With the DRBIII® select Pep Module Tools. Select lab scope. Select Live Data. Select 12 volt square wave. Press F2 for Scope. Press F2 and use the down arrow to set voltage range to 20 volts. Press F2 again when complete. Connect the Black lead to the chassis ground. Connect the Red lead to the PCI Bus circuit in the appropriate terminal of special tool #8815. Turn the ignition on. Observe the voltage display on the DRB Lab Scope. Does the voltage pulse from 0 to approximately 7.5 volts? Yes → Replace and program the Powertrain Control Module in accordance with the Service Information. Perform POWERTRAIN VERIFICATION TEST VER - 1. No → Repair the PCI Bus circuit for an open. Perform POWERTRAIN VERIFICATION TEST VER - 1.	All

Symptom:
*NO RESPONSE FROM PCM (PCM SCI ONLY) - NGC

POSSIBLE CAUSES
CHECK PCM POWERS AND GROUNDS
PCM SCI TRANSMIT CIRCUIT SHORTED TO VOLTAGE
PCM SCI RECEIVE CIRCUIT SHORTED TO VOLTAGE
PCM SCI CIRCUITS SHORTED TOGETHER
PCM SCI TRANSMIT CIRCUIT SHORTED TO GROUND
PCM SCI RECEIVE CIRCUIT SHORTED TO GROUND
PCM SCI RECEIVE CIRCUIT OPEN
PCM SCI TRANSMIT CIRCUIT OPEN
POWERTRAIN CONTROL MODULE

TEST	ACTION	APPLICABILITY
1	Perform the symptom Checking PCM Power and Ground Circuits in the Driveability category. **NOTE: With the DRBIII® in the generic scan tool mode, attempt to communicate with the PCM.** **NOTE: If the DRBIII® can communicate with the PCM in the generic scan tool mode, it may not be necessary to perform this step.** Did the vehicle pass this test? Yes → Go To 2 No → Repair as necessary. Perform POWERTRAIN VERIFICATION TEST VER - 1.	All
2	Turn the ignition off. Disconnect the DRBIII® from the DLC. Disconnect the PCM harness connectors. Turn the ignition on. Measure the voltage of the PCM SCI Transmit circuit at the Data Link harness connector (cav 7). Is the voltage above 1.0 volt? Yes → Repair the PCM SCI Transmit circuit for a short to voltage. Perform POWERTRAIN VERIFICATION TEST VER - 1. No → Go To 3	All
3	Turn the ignition off. Disconnect the DRBIII® from the DLC. Disconnect the PCM harness connectors. Turn the ignition on. Measure the voltage of the PCM SCI Receive circuit at the Data Link harness connector (cav 12). Is the voltage above 1.0 volt? Yes → Repair the PCM SCI Receive circuit for a short to voltage. Perform POWERTRAIN VERIFICATION TEST VER - 1. No → Go To 4	All

*NO RESPONSE FROM PCM (PCM SCI ONLY) - NGC — Continued

TEST	ACTION	APPLICABILITY
4	Turn the ignition off. Disconnect the DRBIII® from the DLC. Disconnect the PCM harness connectors. Measure the resistance between the PCM SCI Transmit circuit and the PCM SCI Receive circuit at the Data Link harness connector (cavs 7 and 12). Is the resistance below 5.0 ohms? Yes → Repair the short between the PCM SCI Transmit and the PCM SCI Receive circuits. Perform POWERTRAIN VERIFICATION TEST VER - 1. No → Go To 5	All
5	Turn the ignition off. Disconnect the PCM harness connectors. Disconnect the DRBIII® from the DLC. Measure the resistance between ground and the PCM SCI Transmit circuit at the Data Link harness connector (cav 7). Is the resistance below 5.0 ohms? Yes → Repair the PCM SCI Transmit circuit for a short to ground. Perform POWERTRAIN VERIFICATION TEST VER - 1. No → Go To 6	All
6	Turn the ignition off. Disconnect the PCM harness connector. Disconnect the DRBIII® from the DLC. Measure the resistance between ground and the PCM SCI Receive circuit in the Data Link harness connector (cav 12). Is the resistance below 5.0 ohms? Yes → Repair the PCM SCI Receive circuit for a short to ground. Perform POWERTRAIN VERIFICATION TEST VER - 1. No → Go To 7	All
7	Turn the ignition off. Disconnect the PCM harness connector. Disconnect the DRBIII® from the DLC. **CAUTION: DO NOT PROBE THE PCM HARNESS CONNECTORS. PROBING THE PCM HARNESS CONNECTORS WILL DAMAGE THE PCM TERMINALS RESULTING IN POOR TERMINAL TO PIN CONNECTION. INSTALL MILLER SPECIAL TOOL #8815 TO PERFORM DIAGNOSIS.** Measure the resistance of the PCM SCI Receive circuit from the Data Link harness connector (cav 12) to the appropriate terminal of special tool #8815. Is the resistance below 5.0 ohms? Yes → Go To 8 No → Repair the PCM SCI Receive circuit for an open. Perform POWERTRAIN VERIFICATION TEST VER - 1.	All

*NO RESPONSE FROM PCM (PCM SCI ONLY) - NGC — Continued

TEST	ACTION	APPLICABILITY
8	Turn the ignition off. Disconnect the PCM harness connector. Disconnect the DRBIII® from the DLC. **CAUTION: DO NOT PROBE THE PCM HARNESS CONNECTORS. PROBING THE PCM HARNESS CONNECTORS WILL DAMAGE THE PCM TERMINALS RESULTING IN POOR TERMINAL TO PIN CONNECTION. INSTALL MILLER SPECIAL TOOL #8815 TO PERFORM DIAGNOSIS.** Measure the resistance of the PCM SCI Transmit circuit from the Data Link harness connector (cav 7) to the appropriate terminal of special tool #8815. Is the resistance below 5.0 ohms? Yes → Go To 9 No → Repair the PCM SCI Transmit circuit for an open. Perform POWERTRAIN VERIFICATION TEST VER - 1.	All
9	If there are no possible causes remaining, view repair. Repair Replace and program the Powertrain Control Module in accordance with the Service Information. Perform POWERTRAIN VERIFICATION TEST VER - 1.	All

Symptom:
*NO RESPONSE FROM RADIO

POSSIBLE CAUSES
NO RESPONSE FROM RADIO
OPEN FUSED IGNITION SWITCH OUTPUT CIRCUIT
OPEN FUSED B+ CIRCUIT
RADIO GROUND CIRCUIT OPEN
OPEN PCI BUS CIRCUIT
RADIO

TEST	ACTION	APPLICABILITY
1	Turn the ignition on. **Note: As soon as one or more module communicates with the DRB, answer the question.** With the DRB, attempt to communicate with the Airbag Control Module (ACM). With the DRB, attempt to communicate with the Instrument Cluster (MIC). Was the DRB able to I/D or establish communications with either of the modules? Yes → Go To 2 No → Refer to the Communications category and perform the symptom PCI Bus Communication Failure. Perform BODY VERIFICATION TEST - VER 1.	All
2	Turn the ignition off. Disconnect the Radio C1 harness connector. Turn the ignition on. Using a 12-volt test light connected to ground, probe the Fused Ignition Switch Output circuit. Is the test light illuminated? Yes → Go To 3 No → Check Fuse Block fuse for an open. If ok, repair the Fused Ignition Switch Output circuit for an open or short. Refer to the wiring diagrams located in the Service Information. Perform BODY VERIFICATION TEST - VER 1.	All
3	Turn the ignition off. Disconnect the Radio C1 harness connector. Using a 12-volt test light connected to ground, probe the Fused B+ circuit. Is the test light illuminated? Yes → Go To 4 No → Repair the Fused B+ circuit for an open or short. Refer to the wiring diagrams located in the Service Information. Perform BODY VERIFICATION TEST - VER 1.	All

*NO RESPONSE FROM RADIO — Continued

TEST	ACTION	APPLICABILITY
4	Turn the ignition off. Disconnect the Radio C1 harness connector. Using a 12-volt test light connected to 12-volts, probe the ground circuit. Is the test light illuminated? Yes → Go To 5 No → Repair the ground circuit for an open. Perform BODY VERIFICATION TEST - VER 1.	All
5	**Note: Ensure there is PCI Bus communication with other modules on the vehicle before proceeding. If not, refer to the symptom list from the menu and repair as necessary.** Disconnect the Radio C1 harness connector. Use Scope input cable CH7058, Cable to Probe adapter CH7062, and the red and black test probes. Connect the scope input cable to the channel one connector on the DRB. Attach the red and black leads and the cable to probe adapter to the scope input cable. With the DRBIII® select Pep Module Tools. Select lab scope. Select Live Data. Select 12 volt square wave. Press F2 for Scope. Press F2 and use the down arrow to set voltage range to 20 volts. Press F2 again when complete. Connect the Black lead to the chassis ground. Connect the Red lead to the PCI Bus circuit in the Radio connector. Turn the ignition on. Observe the voltage display on the DRB Lab Scope. Does the voltage pulse from 0 to approximately 7.5 volts? Yes → Go To 6 No → Repair the PCI Bus circuit for an open. Perform BODY VERIFICATION TEST - VER 1.	All
6	If there are no possible causes remaining, view repair. Repair Replace the Radio. Perform BODY VERIFICATION TEST - VER 1.	All

Symptom:
*NO RESPONSE FROM RIGHT SIACM

POSSIBLE CAUSES
INTERROGATE ACM
GROUND CIRCUIT OPEN
FUSED IGNITION SWITCH OUTPUT CIRCUIT (RUN/START) OPEN
PCI BUS CIRCUIT OPEN
RIGHT SIDE IMPACT AIRBAG CONTROL MODULE

TEST	ACTION	APPLICABILITY
1	Turn the ignition on. With the DRBIII® select Passive Restraints. With the DRBIII® select Airbag and read the active DTC's. Is the Loss Of Ignition Run/Start DTC set? Yes → Refer to the symptom list and perform the Loss Of Ignition Run/Start symptom. Perform AIRBAG VERIFICATION TEST - VER 1. No → Go To 2	All
2	**Ensure that the battery is fully charged.** **Warning: TURN IGNITION OFF, DISCONNECT THE BATTERY AND WAIT TWO MINUTES BEFORE PROCEEDING.** Disconnect the Right Side Impact Airbag Control Module harness connector. Connect the appropriate Load Tool SIACM Adapter to the SIACM connector. Using a 12-volt test light connected to 12-volts, probe the ground circuit. **NOTE: Make sure test light is connected to the Battery positive terminal.** Is the test light illuminated? Yes → Go To 3 No → Repair the Ground circuit for an open. Perform AIRBAG VERIFICATION TEST - VER 1. **Note: When reconnecting Airbag system components, the ignition must be turned off and the battery must be disconnected.**	All
3	**Warning: TURN IGNITION OFF, DISCONNECT THE BATTERY AND WAIT TWO MINUTES BEFORE PROCEEDING.** Disconnect the Right Side Impact Airbag Control Module harness connector. Connect the appropriate Load Tool SIACM Adapter to the SIACM connector. Turn the ignition on and then reconnect the Battery. Measure the voltage of the Fused Ignition Switch Output (Run/Start) circuit. Is the voltage above 6.0 volts? Yes → Go To 4 No → Repair the Fused Ignition Switch Output (Run/Start) circuit for an open. Perform AIRBAG VERIFICATION TEST - VER 1. **Note: When reconnecting Airbag system components, the ignition must be turned off and the battery must be disconnected.**	All

*NO RESPONSE FROM RIGHT SIACM — Continued

TEST	ACTION	APPLICABILITY
4	**NOTE: Ensure there is PCI bus communication with other modules. If not, refer to the PCI Bus Communication Failure symptom and repair as necessary.** **WARNING: TURN THE IGNITION OFF, DISCONNECT THE BATTERY AND WAIT TWO MINUTES BEFORE PROCEEDING.** Disconnect the Right Side Impact Airbag Control Module harness connector. Connect the appropriate Load Tool SIACM Adapter to the SIACM connector. Turn the ignition on and then reconnect the Battery. Use Scope input cable CH7058, Cable to Probe adapter CH7062, and the red and black test probes. Connect the scope input cable to the channel one connector on the DRB. Attach the red and black leads and the cable to probe adapter to the scope input cable. With the DRBIII® select Pep Module Tools. Select lab scope. Select Live Data. Select 12 volt square wave. Press F2 for Scope. Press F2 and use the down arrow to set voltage range to 20 volts. Set Probe to x10. Press F2 again when complete. Connect the Black lead to the chassis ground. Connect the Red lead to the PCI Bus circuit in the Right Side Impact Airbag Control Module connector. Observe the voltage display on the DRB Lab Scope. Does the voltage pulse from 0 to approximately 7.5 volts? Yes → Go To 5 No → Repair the PCI Bus circuit for an open. Perform AIRBAG VERIFICATION TEST - VER 1.	All
5	If there are no possible causes remaining, view repair. Yes → Replace the Right Side Impact Airbag Control Module (RSIACM) in accordance with the Service Information. WARNING: Make sure the battery is disconnected and wait 2 minutes before proceeding. Perform AIRBAG VERIFICATION TEST - VER 1.	All

Symptom:

***NO RESPONSE FROM RKE**

POSSIBLE CAUSES
OPEN GROUND CIRCUIT
OPEN FUSED B+ CIRCUIT
OPEN FUSED IGNITION SWITCH OUTPUT CIRCUIT
OPEN PCI BUS CIRCUIT
REMOTE KEYLESS ENTRY MODULE

TEST	ACTION	APPLICABILITY
1	Turn the ignition off. Turn all lights off. Disconnect the RKE Module harness connector. Using a 12-volt test light connected to 12-volts, probe both ground circuits. Is the test light illuminated for both ground circuits? Yes → Go To 2 No → Repair the ground circuit for an open. Perform BODY VERIFICATION TEST - VER 1.	All
2	Turn the ignition off. Disconnect the RKE Module harness connector. Using a 12-volt test light connected to ground, probe each Fused B+ circuit. Is the test light illuminated for each Fused B+ circuit? Yes → Go To 3 No → Check the fuses that feed the Fused B+ circuits for an open. If ok, repair the Fused B+ circuit that did not illuminate the test light for an open. Refer to the wiring diagrams in the service information. Perform BODY VERIFICATION TEST - VER 1.	All
3	Turn the ignition off. Disconnect the RKE Module harness connector. Turn the ignition on. Using a 12-volt test light connected to ground, probe the Fused Ignition Switch Output circuit. Is the test light illuminated? Yes → Go To 4 No → Repair the Fused Ignition Switch Output circuit for an open. Perform BODY VERIFICATION TEST - VER 1.	All

*NO RESPONSE FROM RKE — Continued

TEST	ACTION	APPLICABILITY
4	**Note: Ensure there is PCI Bus communication with other modules on the vehicle before proceeding. If not, refer to the symptom list from the menu and repair as necessary.** Disconnect the RKE Module harness connector. Use Scope input cable CH7058, Cable to Probe adapter CH7062, and the red and black test probes. Connect the scope input cable to the channel one connector on the DRB. Attach the red and black leads and the cable to probe adapter to the scope input cable. With the DRBIII® select Pep Module Tools. Select lab scope. Select Live Data. Select 12 volt square wave. Press F2 for Scope. Press F2 and use the down arrow to set voltage range to 20 volts. Set probe to x10. Press F2 again when complete. Connect the Black lead to the chassis ground. Connect the Red lead to the PCI Bus circuit in the RKE Module connector. Turn the ignition on. Observe the voltage display on the DRB Lab Scope. Does the voltage pulse from 0 to approximately 7.5 volts? Yes → Replace the Remote Keyless Entry Module in accordance with the service information. Perform BODY VERIFICATION TEST - VER 1. No → Repair the PCI Bus circuit for an open. Perform BODY VERIFICATION TEST - VER 1.	All

Symptom:

*NO RESPONSE FROM SENTRY KEY IMMOBILIZER MODULE

POSSIBLE CAUSES
ATTEMPT TO COMMUNICATE WITH THE MIC
GROUND CIRCUIT OPEN
FUSED IGNITION SWITCH OUTPUT CIRCUIT OPEN
FUSED B(+) CIRCUIT OPEN
OPEN PCI BUS CIRCUIT
SENTRY KEY IMMOBILIZER MODULE

TEST	ACTION	APPLICABILITY
1	Turn the ignition on. With the DRB, enter Body then Electro/Mech Cluster (MIC). Was the DRB able to I/D or communicate with the MIC? Yes → Go To 2 No → Refer to the symptom list for problems related to no communication with the MIC. Perform SKIS VERIFICATION.	All
2	Turn the ignition off. Disconnect the SKIM harness connector. Measure the resistance between ground and the ground circuit. Is the resistance below 5.0 ohms? Yes → Go To 3 No → Repair the ground circuit for an open. Perform SKIS VERIFICATION.	All
3	Turn the ignition off. Disconnect the SKIM harness connector. Turn the ignition on. Using a 12-volt test light connected to ground, probe the Fused Ignition Switch Output circuit. Is the test light illuminated? Yes → Go To 4 No → Repair the Fused Ignition Switch Output circuit for an open. Perform SKIS VERIFICATION.	All
4	Turn the ignition off. Disconnect the SKIM harness connector. Using a 12-volt test light connected to ground, probe the Fused B(+) circuit. Is the test light illuminated? Yes → Go To 5 No → Repair the Fused B+ circuit for an open. Perform SKIS VERIFICATION.	All

*NO RESPONSE FROM SENTRY KEY IMMOBILIZER MODULE — Continued

TEST	ACTION	APPLICABILITY
5	**Note: Ensure there is PCI Bus communication with other modules on the vehicle before proceeding. If not, refer to the symptom list from the menu and repair as necessary.** Disconnect the SKIM harness connector. Use Scope input cable CH7058, Cable to Probe adapter CH7062, and the red and black test probes. Connect the scope input cable to the channel one connector on the DRB. Attach the red and black leads and the cable to probe adapter to the scope input cable. With the DRBIII® select Pep Module Tools. Select lab scope. Select Live Data. Select 12 volt square wave. Press F2 for Scope. Press F2 and use the down arrow to set voltage range to 20 volts. Press F2 again when complete. Connect the Black lead to the chassis ground. Connect the Red lead to the PCI Bus circuit in the SKIM connector. Turn the ignition on. Observe the voltage display on the DRB Lab Scope. Does the voltage pulse from 0 to approximately 7.5 volts? Yes → Go To 6 No → Repair the PCI Bus circuit for an open. Perform SKIS VERIFICATION.	All
6	If there are no possible causes remaining, view repair. Repair Replace and program the Sentry Key Immobilizer Module in accordance with the Service Information. Perform SKIS VERIFICATION.	All

Symptom:
*NO RESPONSE FROM TRANSMISSION CONTROL MODULE - NGC

POSSIBLE CAUSES
NO RESPONSE FROM TRANSMISSION CONTROL MODULE
FUSED IGNITION SWITCH OUTPUT CIRCUIT OPEN
FUSED B(+) CIRCUIT OPEN
GROUND CIRCUIT(S) OPEN
PCI BUS CIRCUIT OPEN
POWERTRAIN CONTROL MODULE

TEST	ACTION	APPLICABILITY
1	Turn the ignition on. **Note: As soon as one or more module communicates with the DRB, answer the question.** With the DRB, attempt to communicate with the Instrument Cluster. With the DRB, attempt to communicate with the Airbag Control Module. Was the DRB able to I/D or establish communications with both of the modules? Yes → Go To 2 No → Refer to the Communications category and perform the appropriate symptom. Perform 40/41TE (NGC) TRANSMISSION VERIFICATION TEST - VER 1.	All
2	Turn the ignition off. Disconnect the PCM harness connectors. **CAUTION: DO NOT PROBE THE PCM HARNESS CONNECTORS. PROBING THE PCM HARNESS CONNECTORS WILL DAMAGE THE PCM TERMINALS RESULTING IN POOR TERMINAL TO PIN CONNECTION. INSTALL MILLER SPECIAL TOOL #8815 TO PERFORM DIAGNOSIS.** Turn the ignition on. Using a 12-volt test light connected to ground, probe both Fused Ignition Switch Output circuits (cavs 11 and 12) in the appropriate terminal of special tool #8815. **NOTE: The test light must illuminate brightly. Compare the brightness to that of a direct connection to the battery.** Is the test light illuminated for both circuits? Yes → Go To 3 No → Repair the Fused Ignition Switch Output circuit for an open. Refer to the wiring diagrams located in the Service Information. Perform 40/41TE (NGC) TRANSMISSION VERIFICATION TEST - VER 1.	All

*NO RESPONSE FROM TRANSMISSION CONTROL MODULE - NGC — Continued

TEST	ACTION	APPLICABILITY
3	Turn the ignition off. Disconnect the PCM harness connectors. **CAUTION: DO NOT PROBE THE PCM HARNESS CONNECTORS. PROBING THE PCM HARNESS CONNECTORS WILL DAMAGE THE PCM TERMINALS RESULTING IN POOR TERMINAL TO PIN CONNECTION. INSTALL MILLER SPECIAL TOOL #8815 TO PERFORM DIAGNOSIS.** Using a 12-volt test light connected to ground, probe the Fused B(+) circuit in the appropriate terminal of special tool #8815. **NOTE: The test light must illuminate brightly. Compare the brightness to that of a direct connection to the battery.** Is the test light illuminated? Yes → Go To 4 No → Repair the Fused B(+) circuit for an open. Refer to the wiring diagrams located in the Service Information. Perform 40/41TE (NGC) TRANSMISSION VERIFICATION TEST - VER 1.	All
4	Turn the ignition off. Disconnect the PCM harness connectors. **CAUTION: DO NOT PROBE THE PCM HARNESS CONNECTORS. PROBING THE PCM HARNESS CONNECTORS WILL DAMAGE THE PCM TERMINALS RESULTING IN POOR TERMINAL TO PIN CONNECTION. INSTALL MILLER SPECIAL TOOL #8815 TO PERFORM DIAGNOSIS.** Using a 12-volt test light connected to 12-volts, probe each ground circuit in the appropriate terminal of special tool #8815. **NOTE: The test light must illuminate brightly. Compare the brightness to that of a direct connection to the battery.** Is the light illuminated at all ground circuits? Yes → Go To 5 No → Repair the Ground circuit(s) for an open. Check the main ground connection to engine block and/or chassis. Refer to the wiring diagrams located in the Service Information. Perform 40/41TE (NGC) TRANSMISSION VERIFICATION TEST - VER 1.	All

*NO RESPONSE FROM TRANSMISSION CONTROL MODULE - NGC — Continued

TEST	ACTION	APPLICABILITY
5	**Note: Ensure there is PCI Bus communication with other modules on the vehicle before proceeding. If not, refer to the symptom list from the menu and repair as necessary.** Disconnect the PCM harness connectors. **CAUTION: DO NOT PROBE THE PCM HARNESS CONNECTORS. PROBING THE PCM HARNESS CONNECTORS WILL DAMAGE THE PCM TERMINALS RESULTING IN POOR TERMINAL TO PIN CONNECTION. INSTALL MILLER SPECIAL TOOL #8815 TO PERFORM DIAGNOSIS.** Use Scope input cable CH7058, Cable to Probe adapter CH7062, and the red and black test probes. Connect the scope input cable to the channel one connector on the DRB. Attach the red and black leads and the cable to probe adapter to the scope input cable. With the DRBIII® select Pep Module Tools. Select lab scope. Select Live Data. Select 12 volt square wave. Press F2 for Scope. Press F2 and use the down arrow to set voltage range to 20 volts. Press F2 again when complete. Connect the Black lead to the chassis ground. Connect the Red lead to the PCI Bus circuit in the appropriate terminal of special tool #8815. Turn the ignition on. Observe the voltage display on the DRB Lab Scope. Does the voltage pulse from 0 to approximately 7.5 volts? Yes → Go To 6 No → Repair the PCI Bus circuit for an open. Perform 40/41TE (NGC) TRANSMISSION VERIFICATION TEST - VER 1.	All
6	Using the schematics as a guide, inspect the wiring and connectors. Repair as necessary. Pay particular attention to all power and ground circuits. If there are no possible causes remaining, view repair. Repair Replace and program the Powertrain Control Module in accordance with the service information. WITH THE DRBIII® PERFORM QUICK LEARN AND REPROGRAM PINION FACTOR. Perform 40/41TE (NGC) TRANSMISSION VERIFICATION TEST - VER 1.	All

Symptom:
*PCI BUS COMMUNICATION FAILURE

POSSIBLE CAUSES
WIRING HARNESS INTERMITTENT
OPEN PCI BUS CIRCUIT AT THE DATA LINK CONNECTOR (DLC)
PCI BUS CIRCUIT SHORTED TO VOLTAGE
MODULE SHORT TO VOLTAGE
PCI BUS CIRCUIT SHORTED TO GROUND
MODULE SHORT TO GROUND

TEST	ACTION	APPLICABILITY
1	**Note: Determine which modules this vehicle is equipped with before beginning.** **Note: When attempting to communicate with any of the modules on this vehicle, the DRB will display 1 of 2 different communication errors: a NO RESPONSE message or a BUS +/- SIGNALS OPEN message.** Turn the ignition on. Using the DRB, attempt to communicate with the following control modules: Airbag Control Module SKIM (SENTRY KEY IMMOBILIZER) MIC (INSTRUMENT CLUSTER) Was the DRBIII® able to communicate with one or more Module(s)? Yes → Go To 2 No → Go To 3	All
2	Turn the ignition off. **Note: Visually inspect the related wiring harness. Look for any chafed, pierced, pinched, or partially broken wires.** **Note: Visually inspect the related wire harness connectors. Look for broken, bent, pushed out, or corroded terminals.** **Note: If the DRB can not communicate with a single module, refer to the category list for the related symptom.** Were any problems found? Yes → Repair wiring harness/connectors as necessary. Perform BODY VERIFICATION TEST - VER 1. No → Test Complete.	All

*PCI BUS COMMUNICATION FAILURE — Continued

TEST	ACTION	APPLICABILITY
3	Turn the ignition off. Disconnect the PCM harness connector. Note: If equipped with NGC follow the caution below. **CAUTION: DO NOT PROBE THE PCM HARNESS CONNECTORS. PROBING THE PCM HARNESS CONNECTORS WILL DAMAGE THE PCM TERMINALS RESULTING IN POOR TERMINAL TO PIN CONNECTION. INSTALL MILLER SPECIAL TOOL #8815 TO PERFORM DIAGNOSIS.** Disconnect the DRB from the Data Link Connector (DLC). Disconnect the negative battery cable. Measure the resistance of the PCI Bus circuit between the Data Link Connector (DLC) and the PCM harness connector. Is the resistance below 5.0 ohms? Yes → Go To 4 No → Repair the PCI Bus circuit for an open. Perform BODY VERIFICATION TEST - VER 1.	All
4	**NOTE: Reconnect the PCM harness connector and the negative battery cable.** Turn the ignition on. Measure the voltage of the PCI Bus circuit at the Data Link Connector (DLC). Is the voltage above 7.0 volts? Yes → Go To 5 No → Go To 6	All
5	Turn the ignition off. Using a voltmeter, connect one end to the PCI Bus circuit at the DLC, and the other end to ground. **Note: When performing the next step turn the ignition off (wait one minute) before disconnecting any module. When the module is disconnected turn the ignition on to check for a short to voltage.** Turn the ignition on. While monitoring the voltmeter, disconnect each module the vehicle is equipped with one at a time. Is the voltage steadily above 7.0 volts with all the modules disconnected? Yes → Repair the PCI Bus circuit for a short to voltage. Perform BODY VERIFICATION TEST - VER 1. No → Replace the module that when disconnected the short to voltage was eliminated. Perform BODY VERIFICATION TEST - VER 1.	All

*PCI BUS COMMUNICATION FAILURE — Continued

TEST	ACTION	APPLICABILITY
6	Turn the ignition off. Disconnect the negative battery cable. Using a ohmmeter, connect one end to the PCI Bus circuit at the DLC, and the other end to ground. While monitoring the ohmmeter, disconnect each module the vehicle is equipped with one at a time. **NOTE: Total bus resistance to ground thru all of the modules is typically between 350 to 1000 ohms. The more modules on the bus, the lower the total bus resistance will be.** Is the resistance below 150.0 ohms with all the modules disconnected? Yes → Repair the PCI Bus circuit for a short to ground. Perform BODY VERIFICATION TEST - VER 1. No → Replace the module that when disconnected the short to ground was eliminated. Perform BODY VERIFICATION TEST - VER 1.	All

Symptom:

COMPASS/TEMPERATURE MIRROR INTERNAL FAILURE

POSSIBLE CAUSES
COMPASS/TEMP MIRROR

TEST	ACTION	APPLICABILITY
1	Perform the Compass/Temp Mirror Self-Check. Turn the ignition on. Press and hold the left lamp button for 20-25 seconds. The display will illuminate each of the VF segments: CAL ZONE N, NE, E, SE, S, SW, W, NW The numerals 0 through 9 C° and F° The Compass/Temp Mirror will test the memory and the compass. Press the left lamp button or cycle the ignition to exit the Self-Check. The Compass/Temp Mirror will display a ″P″ for Pass or an ″F″ for Fail. Did the Compass/Temp Mirror display an ″F″ after the Self-Check? Yes → Replace the Compass/Temp Mirror in accordance with the Service Information. Perform BODY VERIFICATION TEST - VER 1. No → Test Complete.	All

Symptom:

***COMPASS/TEMPERATURE MIRROR DOES CALIBRATE**

POSSIBLE CAUSES
CALIBRATION PROCEDURE
COMPASS/TEMPERATURE MIRROR

TEST	ACTION	APPLICABILITY
1	Perform the Compass/Temp Mirror Self-Check. Turn the ignition on. Depress and hold the Zone/Cal button (left reading lamp button) for 20 - 25 seconds. Turn the ignition on and then release the STEP button. **NOTE: The Compass/Temp Module will illuminate all of the VF segments and then display a ″P″ for Pass or an ″F″ for Fail.** Exit the self-check by depressing the Zone/Cal button or cycling the ignition. Did the Compass/Temp Mirror display an ″F″ during the self-check? Yes → Replace the Compass/Temp Mirror in accordance with the Service Information. NOTE: After replacing the CTM, it must be calibrated to operate properly. Refer to Overhead Console in the Service Information or ″CTM Does Not Calibrate″ in this section. Perform BODY VERIFICATION TEST - VER 1. No → Go To 2	All

*COMPASS/TEMPERATURE MIRROR DOES CALIBRATE — Continued

TEST	ACTION	APPLICABILITY
2	**NOTE: Ensure that the vehicle has been properly demagnetized before attempting to calibrate the compass. Refer to Overhead Console in the Service Manual.** **NOTE: The compass must be calibrated after any replacement or display ″lock-up″.** Calibrate the compass using the following steps: Drive the vehicle to an area away from any large metal objects or overhead power lines. Ensure that the proper magnetic variance zone is stored in the compass memory. Turn the ignition on and ensure that the compass display is not blank. Depress and hold the STEP button for 5-10 seconds until ″ZONE″ appears in the display, then release the STEP button. The number displayed is the variance zone stored in the compass memory. If necessary, refer to the Variance Map in Overhead Console in the Service Manual. To change the variance zone, depress the STEP button to scroll through the zone numbers 1-15 until the desired zone is displayed. After selecting the proper zone, wait approximately 15 seconds for the compass display to return to normal. With the engine running, depress and hold the STEP button for 5-10 seconds, ″ZONE″ will appear, then ″CAL″. Release the STEP button within 2 seconds of ″CAL″ illuminating. With ″CAL″ displayed, drive slowly, less than 5 MPH (8 kPH) in 3 complete 360 degree circles. ″CAL″ will turn off and the compass will be calibrated. Did the compass calibrate? Yes → Test Complete. No → Ensure that all calibration instructions have been followed carefully. Attempt to re-calibrate the compass, if unsuccessful, replace the Compass/Temp Mirror in accordance with the Service Instructions. Perform BODY VERIFICATION TEST - VER 1.	All

Symptom:

***COMPASS/TEMPERATURE MIRROR INOPERATIVE**

POSSIBLE CAUSES
NO RESPONSE - PCI BUS - COMPASS
FUSED B(+) CIRCUIT SHORT TO GROUND
FUSED B(+) CIRCUIT OPEN
FUSED IGNITION SWITCH OUTPUT CIRCUIT SHORT TO GROUND
FUSED IGNITION SWITCH OUTPUT CIRCUIT OPEN
GROUND CIRCUIT OPEN
COMPASS/TEMPERATURE MIRROR

TEST	ACTION	APPLICABILITY
1	Turn the ignition on. With the DRBIII®, attempt to I/D or communicate with the Compass/Temperature Mirror. Was the DRBIII® able to communicate with the Compass/Temperature Mirror. Yes → Go To 2 No → Refer to Communications for the related symptom(s). Perform BODY VERIFICATION TEST - VER 1.	All
2	Turn the ignition off. Remove and inspect the #4 Fuse in the Fuse Block. If the fuse is open, replace with the proper rated fuse. Turn the ignition on for approximately 1 minute. Turn the ignition off. Remove and inspect the #4 Fuse in the Fuse Block. Is the #4 Fuse open? Yes → Check the Fused B(+) circuit for a short to ground and repair as necessary. If the Fused B(+) circuit is not shorted to ground, replace the Compass/Temperature Mirror. Perform BODY VERIFICATION TEST - VER 1. No → Go To 3	All
3	Turn the ignition off. Remove and inspect the #7 Fuse in the Fuse Block. If the fuse is open, replace with the proper rated fuse. Turn the ignition on for approximately 1 minute. Turn the ignition off. Remove and inspect the #7 Fuse in the Fuse Block. Is the #7 Fuse open? Yes → Check the Fused Ignition Switch Output circuit for a short to ground and repair as necessary. If the Fused Ignition Switch Output circuit is not shorted to ground, replace the Compass/Temperature Mirror. Perform BODY VERIFICATION TEST - VER 1. No → Go To 4	All

*COMPASS/TEMPERATURE MIRROR INOPERATIVE — Continued

TEST	ACTION	APPLICABILITY
4	Turn the ignition off. Disconnect the Compass/Temperature Mirror harness connector. Measure the voltage between the Fused B(+) circuit and ground. Is the voltage below 10.5 volts? Yes → Repair the Fused B(+) circuit for an open. Perform BODY VERIFICATION TEST - VER 1. No → Go To 5	All
5	Turn the ignition off. Disconnect the Compass/Temperature Mirror harness connector. Turn the ignition on. Measure the voltage between the Fused Ignition Switch Output circuit and ground. Is the voltage below 10.5 volts? Yes → Repair the Fused Ignition Switch Output circuit for an open. Perform BODY VERIFICATION TEST - VER 1. No → Go To 6	All
6	Turn the ignition off. Disconnect the Compass/Temperature Mirror harness connector. Measure the resistance between ground and the Compass/Temperature Mirror Ground circuit. Is the resistance above 5.0 ohms? Yes → Repair the Ground circuit for an open. Perform BODY VERIFICATION TEST - VER 1. No → Replace the Compass/Temperature Mirror in accordance with the Service Information. Perform BODY VERIFICATION TEST - VER 1.	All

Symptom:
*TEMPERATURE DISPLAY INOPERATIVE OR WRONG (2.0L ONLY)

POSSIBLE CAUSES
DTC PRESENT IN PCM
AMBIENT TEMPERATURE SENSOR
COMPASS/TEMPERATURE MIRROR

TEST	ACTION	APPLICABILITY
1	With the DRBIII®, read DTCs. Does the DRBIII® display any PCM Ambient Temp DTCs? Yes → Refer to DRIVEABILITY for the related symptom(s). Perform BODY VERIFICATION TEST - VER 1. No → Go To 2	All
2	Turn the ignition off. Disconnect the Ambient Temperature Sensor harness connector. Measure the Ambient Temperature Sensor using the following values: 10°C (50°F) Sensor Resistance = 17.99 - 21.81 Kilohms 20°C (68°F) Sensor Resistance = 11.37 - 13.61 Kilohms 25°C (77°F) Sensor Resistance = 9.12 - 10.88 Kilohms 30°C (86°F) Sensor Resistance = 7.37 - 8.75 Kilohms 40°C (104°F) Sensor Resistance = 4.90 - 5.75 Kilohms 50°C (122°F) Sensor Resistance = 3.33 - 3.88 Kilohms Does the Ambient Temperature Sensor resistance measure between the min/max specifications? Yes → Replace the Compass/Temp Mirror in accordance with the Service Information. Perform BODY VERIFICATION TEST - VER 1. No → Replace the Ambient Temperature Sensor in accordance with the Service Information. Perform BODY VERIFICATION TEST - VER 1.	All

Symptom:

***HIGH BEAM HEADLAMPS WILL NOT TRN ON**

POSSIBLE CAUSES
OPEN FUSED B+
DIMMER SWITCH LOW BEAM OUTPUT CIRCUIT SHORT TO GROUND
DIMMER SWITCH HIGH BEAM OUTPUT CIRCUIT SHORT TO GROUND
OPEN FUSE
DIMMER SWITCH LOW BEAM OUTPUT CIRCUIT OPEN
INSTRUMENT CLUSTER
MULTIFUNCTION SWITCH

TEST	ACTION	APPLICABILITY
1	Remove Circuit Breaker 2 from the Fuse Block. Measure voltage of the Fused B+ circuit at the Circuit Breaker connector. Is the voltage above 10.0 volts? Yes → Go To 2 No → Repair the open Fused B+ circuit from Fuse Block fuse 15. Perform BODY VERIFICATION TEST - VER 1.	All
2	Check fuse 15 in the Fuse Block. Is fuse 15 open? Yes → Go To 3 No → Go To 5	All
3	Remove fuse 15 from the Fuse Block. Disconnect the Multifunction Switch connector. Measure resistance of the Dimmer Switch Low Beam Output Circuit to ground. Is the resistance below 5.0 ohms? Yes → Repair the Dimmer Switch Low Beam Output Circuit for a short to ground condition. Perform BODY VERIFICATION TEST - VER 1. No → Go To 4	All
4	Remove Circuit Breaker 2 from the Fuse Block. Disconnect the Multifunction Switch connector. Measure resistance of the Dimmer Switch High Beam Output Circuit and ground. Is the resistance below 5.0 ohms? Yes → Repair the Dimmer Switch High Beam Output Circuit for a short to ground condition. Perform BODY VERIFICATION TEST - VER 1. No → Go To 5	All

*HIGH BEAM HEADLAMPS WILL NOT TRN ON — Continued

TEST	ACTION	APPLICABILITY
5	Turn the ignition off. Check Circuit Breaker 2 Is Circuit Breaker 2 open? Yes → Replace the open Fuse. Perform BODY VERIFICATION TEST - VER 1. No → Go To 6	All
6	Disconnect the Multifunction Switch connector. Turn the headlamps on. Measure voltage of the Fused B+ Circuit in the Multifunction Switch connector. Is the voltage below 1.0 volt. Yes → Go To 7 No → Repair the Dimmer Switch Low Beam Output Circuit for an open condition. Perform BODY VERIFICATION TEST - VER 1.	All
7	Disconnect the Multifunction Switch connector. Turn the headlamps on. Connect a jumper wire between the Dimmer Switch Low Beam Output Circuit and the Dimmer Switch High Beam Output Circuit in the Multifunction Switch connector. Did the High Beam Headlamps come on? Yes → Replace the Instrument cluster. Perform BODY VERIFICATION TEST - VER 1. No → Replace the Multifunction Switch. Perform BODY VERIFICATION TEST - VER 1.	All

Symptom:

***HIGH BEAM HEADLAMPS WILL NOT TURN OFF**

POSSIBLE CAUSES
DIMMER SWITCH HIGH BEAM OUTPUT CIRCUIT SHORT TO VOLTAGE
INSTRUMENT CLUSTER
MULTIFUNCTION SWITCH

TEST	ACTION	APPLICABILITY
1	Remove Circuit Breaker 2 from the Fuse Block. Do the High Beam Headlamps turn off? Yes → Go To 2 No → Repair the Dimmer Switch High Beam Output Circuit for a short to voltage condition. Perform BODY VERIFICATION TEST - VER 1.	All
2	Disconnect the Instrument Cluster connector. Disconnect the Multifunction Switch connector. Measure resistance of the Dimmer Switch High Beam Output Circuit to ground. Is the resistance below 5.0 ohms? Yes → Replace the Instrument Cluster. Perform BODY VERIFICATION TEST - VER 1. No → Replace the Multifunction Switch. Perform BODY VERIFICATION TEST - VER 1.	All

Symptom:

***LOW BEAM HEADLAMPS WILL NOT TURN OFF**

POSSIBLE CAUSES
MULTIFUNCTION SWITCH
DIMMER SWITCH LOW BEAM OUTPUT CIRCUIT SHORT TO VOLTAGE
FUSE BLOCK
INSTRUMENT CLUSTER

TEST	ACTION	APPLICABILITY
1	Turn the headlamp switch to the off position. With the DRBIII®, read the Headlamp Switch Voltage. Does the DRBIII® display Headlamp Switch Voltage between 4.3 and 4.8 Volts? Yes → Go To 2 No → Replace the Multifunction Switch. Perform BODY VERIFICATION TEST - VER 1.	All
2	Turn the ignition off. Disconnect the Instrument Cluster. Turn the ignition on. Measure voltage of the Dimmer Switch Low Beam Output Circuit. Is the voltage below 1.0 volt? Yes → Go To 3 No → Repair the Dimmer Switch Low Beam Output Circuit for a short to voltage condition. Perform BODY VERIFICATION TEST - VER 1.	All
3	Turn the ignition off. Remove Circuit Breaker 2 from the Junction Block. Disconnect the Instrument Cluster harness connector. Measure resistance of the Dimmer Switch Low Beam Output Circuit and ground. Is the resistance below 100.0 ohms? Yes → Replace the Fuse Block. Perform BODY VERIFICATION TEST - VER 1. No → Replace the Instrument Cluster. Perform BODY VERIFICATION TEST - VER 1.	All

Symptom:

***LOW BEAM HEADLAMPS WILL NOT TRN ON**

POSSIBLE CAUSES
MULTIFUNCTION SWITCH
FUSE BLOCK
DIMMER SWITCH LOW BEAM OUTPUT CIRCUIT OPEN
INSTRUMENT CLUSTER
OPEN FUSED B+ TO FUSE BLOCK
FUSED B+ CIRCUIT SHORT TO GROUND
B+ CIRCUIT BREAKER 2

TEST	ACTION	APPLICABILITY
1	Turn the Headlamps on. With the DRBIII® read the Headlamp Switch voltage. Does the DRBIII® display Headlamp Switch voltage below 5.0 volts? Yes → Go To 2 No → Replace the Multifunction Switch. Perform BODY VERIFICATION TEST - VER 1.	All
2	Remove Circuit Breaker 2 from the Fuse Block. Measure voltage of the Fused B+ circuit in the Circuit Breaker connector. Is the voltage above 10.0 volts? Yes → Go To 3 No → Replace the Fuse Block. Perform BODY VERIFICATION TEST - VER 1.	All
3	Remove Circuit Breaker 2 from the Fuse Block. Measure voltage of the Fused B+ Circuit in the Circuit Breaker connector. Is the voltage above 10.0 volts? Yes → Go To 4 No → Go To 5	All
4	Disconnect the Multifunction Switch harness connector. Connect a 12 volt test light between the Dimmer Switch Low Beam Output Circuit and the Fused B+ Circuit in the Multifunction Switch connector. Did the test light illuminate brightly? Yes → Repair the Dimmer Switch Low Beam Output Circuit for an open condition. Perform BODY VERIFICATION TEST - VER 1. No → Replace the Instrument Cluster. Perform BODY VERIFICATION TEST - VER 1.	All

*LOW BEAM HEADLAMPS WILL NOT TRN ON — Continued

TEST	ACTION	APPLICABILITY
5	Remove and test Fuse 15 from the Fuse Block. Is the Fuse open? Yes → Go To 6 No → Repair the open Fused B+ Circuit between the Multifunction Switch and the Fuse Block. Perform BODY VERIFICATION TEST - VER 1.	All
6	Remove Circuit Breaker 2 from the Fuse Block. Measure resistance of the Fused B+ circuit in the fuse connector to ground. Is the resistance below 5.0 ohms? Yes → Repair the Fused B+ Circuit for a short to ground condition. Perform BODY VERIFICATION TEST - VER 1. No → Replace the Circuit Breaker and retest the system. Perform BODY VERIFICATION TEST - VER 1.	All

Symptom List:

ABS INDICATOR CIRCUIT OPEN
AIRBAG INDICATOR CIRCUIT OPEN

Test Note: All symptoms listed above are diagnosed using the same tests. The title for the tests will be ABS INDICATOR CIRCUIT OPEN.

When Monitored and Set Condition:

ABS INDICATOR CIRCUIT OPEN

When Monitored: With the ignition on and requested to turn on by the ABS module.

Set Condition: The Instrument Cluster detects an open during the internal test on the indicator.

AIRBAG INDICATOR CIRCUIT OPEN

When Monitored: With the ignition on and requested to turn on by the ACM.

Set Condition: The Instrument Cluster detects an open during the internal test on the indicator.

POSSIBLE CAUSES
INSTRUMENT CLUSTER

TEST	ACTION	APPLICABILITY
1	**NOTE: The Instrument Cluster performs internal tests on the ABS and Airbag indicators each ignition cycle. These indicator LEDs are not replaceable.** With the DRBIII®, erase DTCs. Cycle the ignition and wait approximately 1 minute. Did the ABS or Airbag indicator DTC reset? Yes → Replace the Instrument Cluster in accordance with the Service Information. Perform BODY VERIFICATION TEST - VER 1. No → Test Complete.	All

Symptom List:

ABS MESSAGE NOT RECEIVED
ACM MESSAGE NOT RECEIVED
EATX MESSAGE NOT RECEIVED
SBEC MESSAGE NOT RECEIVED
SKIM MESSAGE NOT RECEIVED

Test Note: All symptoms listed above are diagnosed using the same tests. The title for the tests will be ABS MESSAGE NOT RECEIVED.

When Monitored and Set Condition:

ABS MESSAGE NOT RECEIVED

When Monitored: With the ignition in the Run/Start position.

Set Condition: The Instrument Cluster detects no PCI Bus message from the CAB module for 12 (twelve) seconds.

ACM MESSAGE NOT RECEIVED

When Monitored: With the ignition in the Run/Start position.

Set Condition: The Instrument Cluster detects no PCI Bus message from the AECM for 5 (five) seconds.

EATX MESSAGE NOT RECEIVED

When Monitored: With the ignition on.

Set Condition: The Instrument Cluster detects no PCI Bus message from the EATX for 5 (five) seconds.

SBEC MESSAGE NOT RECEIVED

When Monitored: With the ignition in the Run/Start position.

Set Condition: The Instrument Cluster detects no PCI Bus message from the SBEC for 20 (twenty) seconds.

SKIM MESSAGE NOT RECEIVED

When Monitored: With the ignition in the Run/Start position.

Set Condition: The Instrument Cluster detects no PCI Bus message from the SKIM Module for 20 (twenty) seconds.

POSSIBLE CAUSES
BUS MESSAGE NOT RECEIVED DTC PRESENT
INTERMITTENT CONDITION
INSTRUMENT CLUSTER

ABS MESSAGE NOT RECEIVED — Continued

TEST	ACTION	APPLICABILITY
1	With the DRBIII®, attempt to communicate with the ABS, ACM, EATX, SBEC, or SKIM module. Was the DRBIII® able to I/D or communicate with the Module in question? Yes → Go To 2 No → Refer to Communication category for the related symptom(s).	All
2	With the DRBIII®, erase DTCs. Cycle the ignition, wait approximately 1 minute. With the DRBIII®, read DTCs. Did the DTC reset? Yes → Replace the Instrument Cluster in accordance with the Service Information. Perform BODY VERIFICATION TEST - VER 1. No → The condition is not present at this time. Monitor DRBIII® parameters while wiggling the related wire harness. Refer to any Technical Service Buletins (TSB) that may apply. Visually inspect the related wiring harness and connector terminals.	All

Symptom:
BATTERY LOSS

When Monitored and Set Condition:

BATTERY LOSS

When Monitored: With the ignition on.

Set Condition: When the Instrument Cluster detects that the ignition has been turned on but detects no Fused B(+) circuit.

POSSIBLE CAUSES
PDC FUSE #13 DEFECTIVE
PDC FUSED B(+) CIRCUIT SHORT TO GROUND
FUSE BLOCK #4 FUSE DEFECTIVE
FUSE BLOCK FUSED B(+) CIRCUIT SHORT TO GROUND
B(+) TO PDC #13 FUSE OPEN
B(+) TO FUSE BLOCK #4 FUSE OPEN
FUSED B(+) CIRCUIT TO INSTRUMENT CLUSTER OPEN
INSTRUMENT CLUSTER

TEST	ACTION	APPLICABILITY
1	Turn the ignition off. Remove and inspect the #13 Fuse in the PDC. If the fuse is open, replace with the proper rated fuse. Turn the ignition on for approximately 1 minute. Turn the ignition off. Remove and inspect the #13 Fuse in the PDC. Is the #13 Fuse in the PDC open? Yes → Repair the PDC #13 Fused B(+) circuit for a short to ground. Perform BODY VERIFICATION TEST - VER 1. No → Go To 2	All
2	Turn the ignition off. Remove and inspect the Fuse Block #4 Fuse. If the fuse is open, replace with the proper rated fuse. Turn the ignition on for approximately 1 minute. Turn the ignition off. Remove and inspect the Fuse Block #4 Fuse. Is the Fuse Block #4 Fuse open? Yes → Repair the Fuse Block Fused B(+) circuit for a short to ground. Perform BODY VERIFICATION TEST - VER 1. No → Go To 3	All

BATTERY LOSS — Continued

TEST	ACTION	APPLICABILITY
3	Turn the ignition off. Measure the voltage between the PDC #13 Fuse and ground. Is the voltage above 10.5 volts? Yes → Go To 4 No → Repair the B(+) circuit to the PDC #13 Fuse for an open. Perform BODY VERIFICATION TEST - VER 1.	All
4	Turn the ignition off. Measure the voltage between the Fuse Block #4 Fuse and ground. Is the voltage above 10.5 volts? Yes → Go To 5 No → Repair the B(+) circuit to the Fuse Block #4 Fuse for an open. Perform BODY VERIFICATION TEST - VER 1.	All
5	Turn the ignition off. Disconnect the Instrument Cluster harness connector. Check connectors - Clean/repair as necessary. Measure the voltage between the Fused B(+) circuit and ground. Is the voltage above 10.5 volts? Yes → Replace the Instrument Cluster in accordance with the Service Information. Perform BODY VERIFICATION TEST - VER 1. No → Repair the Fused B(+) circuit for an open between the Fuse Block #4 Fuse and the Instrument Cluster. Perform BODY VERIFICATION TEST - VER 1.	All

Symptom List:

CLUSTER BUS TX SHUTDOWN
NO PCI BUS TRANSMISSION

Test Note: All symptoms listed above are diagnosed using the same tests. The title for the tests will be CLUSTER BUS TX SHUTDOWN.

When Monitored and Set Condition:

CLUSTER BUS TX SHUTDOWN

When Monitored: Continuous.

Set Condition: The Instrument Cluster fails the loop- back test on the PCI Bus.

NO PCI BUS TRANSMISSION

When Monitored: Continous.

Set Condition: The Instrument Cluster microprocessor fails the loop- back test on the PCI Bus.

POSSIBLE CAUSES
INSTRUMENT CLUSTER

TEST	ACTION	APPLICABILITY
1	With the DRBIII®, erase DTCs. Cycle the ignition and wait approximately 1 minute. With the DRBIII®, read DTCs. Did this DTC reset? Yes → Replace the Instrument Cluster in accordance with the Service Information. Perform BODY VERIFICATION TEST - VER 1. No → Test Complete.	All

Symptom:
EATX MISMATCH

When Monitored and Set Condition:

EATX MISMATCH

When Monitored: With the ignition on.

Set Condition: The Instrument Cluster detects that the configuration programmed by the plant does not equal the configuration of the cluster.

POSSIBLE CAUSES
EATX BUS MESSAGE DTC PRESENT
INSTRUMENT CLUSTER CONFIGURATION INCORRECT
INSTRUMENT CLUSTER

TEST	ACTION	APPLICABILITY
1	With the DRBIII®, read DTCs. Does the DRBIII® display "EATX Bus Message Not Received"? Yes → Refer to Communication for the related symptom. No → Go To 2	All
2	With the DRBIII® in Cluster Type, ensure that the Instrument Cluster is correctly configured. Is the Instrument Cluster configured correctly? Yes → Replace the Instrument Cluster in accordance with the Service Information. Perform BODY VERIFICATION TEST - VER 1. No → With the DRBIII®, configure the Instrument Cluster. Perform BODY VERIFICATION TEST - VER 1.	All

Symptom:
FUEL LEVEL SENSOR OPEN

When Monitored and Set Condition:

FUEL LEVEL SENSOR OPEN

When Monitored: With the ignition on. (Customer Complaint: fuel gauge displays empty)

Set Condition: The Instrument Cluster monitors the Fuel Level Sensor Signal circuit resistance. If the Cluster detects a resistance greater than 1500 ohms or less than 25 ohms for 18 seconds, this code will set.

POSSIBLE CAUSES
INTERMITTENT CONDITION
FUEL LEVEL SENSOR SIGNAL CIRCUIT SHORT TO VOLTAGE
FUEL LEVEL SENSOR SIGNAL CIRCUIT OPEN
FUEL PUMP MODULE GROUND CIRCUIT OPEN
FUEL LEVEL SENSOR
INSTRUMENT CLUSTER

TEST	ACTION	APPLICABILITY
1	Turn the ignition on. With the DRBIII®, erase DTC's. Cycle the ignition off and then back on. With the DRBIII®, read DTC's. Does the DRBIII® display "Fuel Level Sensor Open"? No → Test complete. DTC is intermittent. Road test the vehicle and recheck for DTC's. If the code returns, rerun this test. Refer to any Technical Service Bulletins (TSB) that may aply. Inspect related harness and connectors. Perform BODY VERIFICATION TEST - VER 1. Yes → Go To 2	All
2	Turn the ignition off. Disconnect the Fuel Pump Module harness connector. Disconnect the Instrument Cluster harness connector. Check connectors - Clean/repair as necessary. Turn the ignition on. **NOTE: The ignition must be turned off for at least 10 minutes to allow the cluster to go to "sleep" before proceeding with this test.** Measure the voltage between the Fuel Level Sensor Signal circuit and ground. Is there any voltage present? Yes → Repair the Fuel Level Sensor Signal circuit for a short to voltage. Perform BODY VERIFICATION TEST - VER 1. No → Go To 3	All

FUEL LEVEL SENSOR OPEN — Continued

TEST	ACTION	APPLICABILITY
3	Turn the ignition off. Disconnect the Fuel Pump Module harness connector. Check connectors - Clean/repair as necessary. Connect a jumper wire between the Fuel Level Sensor Signal circuit and ground. Turn the ignition on. With the DRBIII® in Sensors, read the Fuel Sender Volts. Does the DRBIII® display 0 (zero) volts? Yes → Go To 4 No → Repair the Fuel Level Sensor Signal circuit for an open. Perform BODY VERIFICATION TEST - VER 1.	All
4	Turn the ignition off. Disconnect the Fuel Pump Module harness connector. Check connectors - Clean/repair as necessary. Measure the resistance between ground and the Fuel Level Sensor Ground circuit. Is the resistance below 5.0 ohms? Yes → Go To 5 No → Repair the Fuel Pump Module Ground circuit for an open. Perform BODY VERIFICATION TEST - VER 1.	All
5	Turn the ignition off. Disconnect the Fuel Pump Module harness connector. Check connectors - Clean/repair as necessary. Measure the resistance of the Fuel Level Sensor between the Sensor Signal circuit pin and the Sensor Ground circuit pin. Is the resistance above 1500 ohms? Yes → Replace the Fuel Level Sender in accordance with the Service Information. Perform BODY VERIFICATION TEST - VER 1. No → Replace the Instrument Cluster in accordance with the Service Information. Perform BODY VERIFICATION TEST - VER 1.	All

Symptom:
FUEL LEVEL SENSOR SHORT

When Monitored and Set Condition:

FUEL LEVEL SENSOR SHORT

When Monitored: When the ignition is on. (Customer Complaint: fuel gauge displays empty).

Set Condition: The Instrument Cluster monitors the fuel level sensor signal circuit for a resistance value between approximately 25 ohms to 1100 ohms. If the Cluster senses a resistance less than 25 ohms, this code will set.

POSSIBLE CAUSES
FUEL LEVEL SENSOR SHORT INTERMITTENT CONDITION
FUEL LEVEL SENSOR
FUEL LEVEL SENSOR SIGNAL CIRCUIT SHORT TO SENSOR GROUND CIRCUIT
INSTRUMENT CLUSTER

TEST	ACTION	APPLICABILITY
1	With the DRBIII®, erase DTC's. Turn the ignition on, wait for one minute. With the DRBIII®, read DTC's. Does the DRBIII® display Fuel Level Sensor Short? No → Test complete. DTC is intermittent. Road test the vehicle and recheck for DTC's. If the code returns, rerun this test. Refer to any Technical Service Bulletins (TSB) that may apply. Inspect related harness and connectors. Perform BODY VERIFICATION TEST - VER 1. Yes → Go To 2	All
2	Turn the ignition off. Disconnect the Fuel Pump Module harness connector. Check connectors - Clean/repair as necessary. Measure the resistance of the Fuel Level Sensor between the Sensor Signal circuit pin and the Sensor Ground circuit pin (sensor side). Is the resistance below 50.0 ohms? Yes → Replace the Fuel Level Sensor in accordance with the Service Information. Perform BODY VERIFICATION TEST - VER 1. No → Go To 3	All

FUEL LEVEL SENSOR SHORT — Continued

TEST	ACTION	APPLICABILITY
3	Turn the ignition off. Disconnect the Instrument Cluster harness connector. Disconnect the Fuel Pump Module harness connector. Check connectors - Clean/repair as necessary. Measure the resistance of the Fuel Level Sensor Signal circuit to ground. Is the resistance below 10,000 (10 K) ohms? NOTE: it should be infinite. Yes → Repair the Fuel Level Sensor Signal circuit for a short to the Sensor Ground circuit. Perform BODY VERIFICATION TEST - VER 1. No → Test Complete.	All

Symptom:
PANEL DIMMER OPEN

When Monitored and Set Condition:

PANEL DIMMER OPEN

When Monitored: When the ignition is on.

Set Condition: The Instrument Cluster monitors the panel lamps dimmer signal circuit for a resistance value between 0.0 ohms and approximately 3,650 ohms. When the cluster senses a value greater than 30,000 ohms for more than 5 seconds, this code will set. When this condition occurs, the cluster illumination will default to full brightness.

POSSIBLE CAUSES
INTERMITTENT CONDITION
PANEL LAMPS DIMMER SIGNAL CIRCUIT SHORT TO VOLTAGE
PANEL LAMPS DIMMER SIGNAL CIRCUIT OPEN
MULTI- FUNCTION SWITCH
MULTI- FUNCTION SWITCH GROUND CIRCUIT OPEN
INSTRUMENT CLUSTER

TEST	ACTION	APPLICABILITY
1	With the DRBIII®, erase DTC's. Turn the Park Lamps on. Wait 10 (ten) seconds. Rotate the Panel Lamps Dimmer Switch through the full range of adjustment. With the DRBIII®, read DTC's. Does the DRBIII® display Panel Dimmer Open? Yes → Go To 2 No → The condition is not present at this time. Monitor DRBIII® parameters while wiggling the related wire harness. Refer to any Technical Service Bulletins (TSB) that may apply. Visually inspect the related wiring harness and connector terminals. Perform BODY VERIFICATION TEST - VER 1.	All
2	Turn the ignition off. Disconnect the Instrument Cluster harness connector. Disconnect the Multi- function Switch harness connector. Check connectors - Clean/repair as necessary. Turn the ignition on. Measure the voltage between the Panel Lamps Dimmer Signal circuit and ground. Is there any voltage present? Yes → Repair the Panel Lamps Dimmer Signal circuit for a short to voltage. Perform BODY VERIFICATION TEST - VER 1. No → Go To 3	All

PANEL DIMMER OPEN — Continued

TEST	ACTION	APPLICABILITY
3	Turn the ignition off. Disconnect the Instrument Cluster harness connector. Disconnect the Multi-Function Switch harness connector. Check connectors - Clean/repair as necessary. Measure the resistance of the Panel Lamps Dimmer Signal circuit. Is the resistance below 5.0 ohms? Yes → Go To 4 No → Repair the open in the Panel Lamps Dimmer Signal circuit. Perform BODY VERIFICATION TEST - VER 1. **NOTE: Reconnect the Multi-Function Switch harness connector before proceeding.**	All
4	Turn the ignition off. Disconnect the Multi-Function Switch harness connector. Check connectors - Clean/repair as necessary. Measure the resistance of the Multi- Function Switch Ground circuit to a known good ground. Does the resistance measure less than 5.0 ohms? Yes → Go To 5 No → Repair the open in the Multi- Function Switch Ground circuit. Perform BODY VERIFICATION TEST - VER 1.	All
5	Turn the ignition off. Disconnect the Instrument Cluster harness connector. Ensure the Multi-Function Switch is connected before proceeding. Measure the resistance of the Panel Lamps Dimmer Signal circuit from the Instrument Cluster harness connector to ground. Move the Instrument Panel Dimmer Switch through the entire range of adjustment while observing the ohmmeter. Did the resistance increment smoothly between approximately 0.0 ohms to approximately 3,500 ohms? Yes → Replace the Instrument Cluster in accordance with the Service Information. Perform BODY VERIFICATION TEST - VER 1. No → Replace the Multi-Function Switch in accordance with the Service Information. Perform BODY VERIFICATION TEST - VER 1.	All

Symptom:
***ALL GAUGES INOPERATIVE**

POSSIBLE CAUSES
NO RESPONSE - PCI BUS
NO RESPONSE - PCI BUS - POWERTRAIN CONTROL MODULE
NO RESPONSE - PCI BUS - INSTRUMENT CLUSTER
FUSED IGNITION SWITCH OUTPUT CIRCUIT SHORT TO GROUND
FUSED IGNITION SWITCH OUTPUT CIRCUIT OPEN
INSTRUMENT CLUSTER GROUND CIRCUIT OPEN
INSTRUMENT CLUSTER

TEST	ACTION	APPLICABILITY
1	Turn the ignition on. With the DRBIII®, select System Monitors, then J1850 Module Scan. Does the DRBIII® display MIC PRESENT on the BUS? Yes → Go To 2 No → Refer to the COMMUNICATION category and perform the appropriate symptom.	All
2	Turn the ignition on. With the DRBIII®, select Body, MIC, SYSTEM TESTS, PCM Monitor. Does the DRBIII® display PCM INACTIVE ON THE BUS? Yes → Refer to the symptom list for problems related to *NO RESPONSE FROM THE POWERTRAIN CONTROL MODULE. No → Go To 3	All
3	Turn the ignition on. With the DRBIII®, select Body, MIC, MODULE DISPLAY. Does the DRBIII® display NO RESPONSE from MIC? Yes → Refer to the symptom list for problems related to *NO RESPONSE FROM THE INSTRUMENT CLUSTER. No → Go To 4	All

*ALL GAUGES INOPERATIVE — Continued

TEST	ACTION	APPLICABILITY
4	Turn the ignition off. Inspect the #11 Fuse in the Fuse Block for LHD vehicles (#12 Fuse for LHD autostick equipped vehicles); #10 Fuse in the Fuse Block for RHD vehicles (#9 Fuse for RHD autostick equipped vehicles). If the fuse is open, replace with proper rated fuse. Turn the ignition on for one minute. Turn the ignition off. Inspect the #11 Fuse in the Fuse Block for LHD vehicles (#12 Fuse for LHD autostick equipped vehicles); #10 Fuse in the Fuse Block for RHD vehicles (#9 Fuse for RHD autostick equipped vehicles). Is the fuse open? Yes → Repair the Fused Ignition Switch Output circuit for a short to ground. Perform BODY VERIFICATION TEST - VER 1. No → Go To 5	All
5	Turn the ignition off. Disconnect the Instrument Cluster harness connector. Turn the ignition on. Measure the voltage between the Fused Ignition Switch Output circuit (pin 15) and ground. For autostick equipped vehicles, also measure the voltage between the Fused Ignition Switch Output circuit (pin 9) and ground. Is the voltage above 10.5 volts? Yes → Go To 6 No → Repair the Fused Ignition Switch Output circuit for an open. Perform BODY VERIFICATION TEST - VER 1.	All
6	Turn the ignition off. Disconnect the Instrument Cluster harness connector. Measure the resistance between ground and the Instrument Cluster Ground circuit. Is the resistance below 5.0 ohms? Yes → Replace the Instrument Cluster in accordance with the Service Information. Perform BODY VERIFICATION TEST - VER 1. No → Repair the Instrument Cluster Ground circuit for an open. Perform BODY VERIFICATION TEST - VER 1.	All

Symptom:

***ANY OR ALL GAUGE POINTER(S) ON WRONG SIDE OF STOP**

POSSIBLE CAUSES
INSTRUMENT CLUSTER

TEST	ACTION	APPLICABILITY
1	To repair any or all gauges with the pointer on the wrong side of the stop, perform either of the following procedures: Procedure 1: Turn the ignition off. Remove the #4 Fuse from the Fuse Block. Turn the ignition on, then off. Reinstall the #4 Fuse to the Fuse Block. Procedure 2: Perform the Instrument Cluster self-test. Turn the ignition off. Press and hold the Trip Reset button. Turn the ignition on. Did the gauge pointer(s) in question return to the proper position? Yes → Test Complete. No → Replace the Instrument Cluster in accordance with the Service Information. Perform BODY VERIFICATION TEST - VER 1.	All

Symptom:

***ANY PCI BUS INDICATOR INOPERATIVE**

POSSIBLE CAUSES
*LED DEFECTIVE
INSTRUMENT CLUSTER

TEST	ACTION	APPLICABILITY
1	**NOTE: Refer to the Service Information: Diagnosis and Testing - Instrument Cluster Lamps for complete list of Indicators that will illuminate during the Self Test.** **NOTE: Ensure that the Instrument Cluster communicates on the PCI Bus.** **NOTE: Diagnose and repair any PCM, ACM, ABS, RKE, or SKIM DTCs before proceeding with this test.** Turn the ignition off. Remove the Instrument Cluster. Remove the inoperative LED from the Instrument Cluster. Using a DVOM, select ″Diode Mode″, and connect the leads across the LED. **NOTE: Ensure that the RED lead is on the ″+″ of the LED.** Did the LED illuminate? Yes → Replace the Instrument Cluster in accordance with the Service Information. Perform BODY VERIFICATION TEST - VER 1. No → Replace the Indicator LED in accordance with the Service Information. Perform BODY VERIFICATION TEST - VER 1.	All

Symptom:

***BRAKE WARNING INDICATOR ALWAYS ON**

POSSIBLE CAUSES
BRAKE WARNING INDICATOR CIRCUIT SHORT TO GROUND
RED BRAKE WARNING INDICATOR DRIVER CIRCUIT SHORT TO GROUND
PARK BRAKE SWITCH
BRAKE FLUID LEVEL SWITCH
INSTRUMENT CLUSTER
POWERTRAIN CONTROL MODULE

TEST	ACTION	APPLICABILITY
1	Turn the ignition on. Ensure that the Parking Brake is disengaged. With the DRBIII® in Inputs/Outputs, read the Parking Brake Switch state. Does the DRBIII® display ″Closed″ with the Parking Brake disengaged? Yes → Go To 2 No → Go To 4	All
2	Turn the ignition off. Disconnect the Park Brake Switch harness connector. Turn the ignition on. With the DRBIII® in Inputs/Outputs, read the Parking Brake Switch state. Does the DRBIII® display ″Open″? Yes → Replace the Park Brake Switch in accordance with the Service Information. Perform BODY VERIFICATION TEST - VER 1. No → Go To 3	All
3	Turn the ignition off. Disconnect the Park Brake Switch harness connector. Disconnect the Instrument Cluster harness connector. Measure the resistance between ground and the Brake Warning Indicator Driver circuit. Is the resistance below 10,000 ohms (should be infinite)? Yes → Repair the Brake Warning Indicator circuit for a short to ground (between the Park Brake Switch and the Instrument Cluster). Perform BODY VERIFICATION TEST - VER 1. No → Replace the Instrument Cluster in accordance with the Service Information. Perform BODY VERIFICATION TEST - VER 1.	All

*BRAKE WARNING INDICATOR ALWAYS ON — Continued

TEST	ACTION	APPLICABILITY
4	**NOTE: Ensure that the brake fluid is properly filled to the correct level, and the Base Brake system operates properly.** Turn the ignition on. With the DRBIII® in Inputs/Outputs, read the Brake Fluid Level Switch state. Disconnect the Brake Fluid Level Switch harness connector. With the DRBIII® in Inputs/Outputs, read the Brake Fluid Level Switch state. Did the DRBIII® Brake Fluid Level Switch input change states? Yes → Replace the Brake Fluid Level Switch in accordance with the Service Information. Perform BODY VERIFICATION TEST - VER 1. No → Go To 5	All
5	Turn the ignition off. Disconnect the Brake Fluid Level Switch harness connector. Disconnect the PCM (C2 connector for 2.0L vehicles) harness connector. Measure the resistance between ground and the Red Brake Warning Indicator Driver circuit. Is the resistance below 10,000 ohms (should be infinite)? Yes → Repair the Red Brake Warning Indicator Driver circuit for a short to ground (between the Brake Fluid Level Switch and the Instrument Cluster). Perform BODY VERIFICATION TEST - VER 1. No → Test Complete.	All

Symptom:

***BRAKE WARNING INDICATOR INOPERATIVE**

POSSIBLE CAUSES
BRAKE WARNING INDICATOR CIRCUIT OPEN
INDICATOR LED
BRAKE FLUID LEVEL SWITCH
PARK BRAKE SWITCH
RED BRAKE WARNING INDICATOR DRIVER CIRCUIT OPEN
BRAKE FLUID LEVEL SWITCH GROUND CIRCUIT OPEN
INSTRUMENT CLUSTER
POWERTRAIN CONTROL MODULE

TEST	ACTION	APPLICABILITY
1	**NOTE: The Brake Warning Indicator should illuminate during the bulb check cycle, and will also illuminate using the Self Test.** Observe the Brake Warning Indicator during the bulb check or Instrument Cluster Self Test. Did the indicator illuminate? Yes → Go To 2 No → Go To 8	All
2	**NOTE: The Brake Warning Indicator illuminates with the Park Brake engaged or with low Brake Fluid.** Is the Brake Warning Indicator inoperative with the use of the Park brake? Yes → Go To 3 No → Go To 5	All
3	Turn the ignition off. Disconnect the Park Brake Switch harness connector. Connect a jumper wire between the Brake Warning Indicator circuit and ground. Turn the ignition on and observe the Brake Warning Indicator. Does the Indicator illuminate? Yes → Replace the Park Brake Switch in accordance with the Service Information. Perform BODY VERIFICATION TEST - VER 1. No → Go To 4	All

*BRAKE WARNING INDICATOR INOPERATIVE — Continued

TEST	ACTION	APPLICABILITY
4	Turn the ignition off. Disconnect the Instrument Cluster harness connector. Disconnect the Park Brake Switch harness connector. Measure the resistance of the Brake Warning Indicator circuit. Is the resistance below 5.0 ohms? Yes → Replace the Instrument Cluster in accordance with the Service Information. Perform BODY VERIFICATION TEST - VER 1. No → Repair the Brake Warning Indicator circuit for an open. Perform BODY VERIFICATION TEST - VER 1.	All
5	Turn the ignition on. With the DRBIII® in Inputs/Outputs, read the Brake Fluid Level Switch state. Disconnect the Brake Fluid Level Switch harness connector. Connect a jumper wire between cavity A and cavity B of the Brake Fluid Level Switch harness connector. With the DRBIII®, observe the Brake Fluid Level input. Did the Brake Fluid Level input change state? Yes → Replace the Brake Fluid Level Switch in accordance with the Service Information. Perform BODY VERIFICATION TEST - VER 1. No → Go To 6	All
6	Turn the ignition off. Disconnect the Brake Fluid Level Switch harness connector. Measure the resistance of the Brake Fluid Level Switch ground circuit. Is the resistance above 5.0 ohms? Yes → Repair the Brake Fluid Level Switch Ground circuit for an open. Perform BODY VERIFICATION TEST - VER 1. No → Go To 7	All
7	Turn the ignition off. Disconnect the PCM (C2 connector for 2.0L equipped vehicles) harness connector. Disconnect the Brake Fluid Level Switch harness connector. Measure the resistance of the Red Brake Warning Indicator Driver circuit. Is the resistance above 5.0 ohms? Yes → Repair the Red Brake Warning Indicator Driver circuit for an open. Perform BODY VERIFICATION TEST - VER 1. No → Replace the Powertrain Control Module in accordance with the Service Information. Perform BODY VERIFICATION TEST - VER 1.	All

*BRAKE WARNING INDICATOR INOPERATIVE — Continued

TEST	ACTION	APPLICABILITY
8	Turn the ignition off. Remove the Instrument Cluster. Remove the inoperative Indicator LED. Using a DVOM, select ″Diode Mode″, and attach the leads across the LED. **NOTE: Ensure that the RED lead is on the ″+″ of the LED.** Did the LED illuminate? Yes → Replace the Instrument Cluster in accordance with the Service Information. Perform BODY VERIFICATION TEST - VER 1. No → Replace the Brake Warning Indicator LED in accordance with the Service Information. Perform BODY VERIFICATION TEST - VER 1.	All

Symptom:
*FRONT FOG LAMP INDICATOR INOPERATIVE

POSSIBLE CAUSES
FRONT FOG LAMP INDICATOR CIRCUIT OPEN
INDICATOR LED
INSTRUMENT CLUSTER

TEST	ACTION	APPLICABILITY
1	**NOTE: Ensure that the Fog Lamps operate properly before proceeding with this test. If not, select "Service Information" from the menu and repair as necessary.** Disconnect the Instrument Cluster harness connector. Turn the Headlamps on. Turn the Fog Lamps on. **NOTE: Ensure that the battery is fully charged.** Measure the voltage between the Fog Lamp Switch Output circuit and ground. Is the voltage greater than 10.0 volts? Yes → Go To 2 No → Repair the open in the Front Fog Lamp Switch Output circuit. Perform BODY VERIFICATION TEST - VER 1.	All
2	Turn the ignition off. Remove the Instrument Cluster. Remove the inoperative LED. Using a DVOM, select "Diode Mode", and attach the leads across the LED. **NOTE: Ensure that the RED lead is on the "+" of the LED.** Did the indicator illuminate? Yes → Replace the Instrument Cluster in accordance with the Service Information. Perform BODY VERIFICATION TEST - VER 1. No → Replace the inoperative indicator LED in accordance with the Service Information. Perform BODY VERIFICATION TEST - VER 1.	All

Symptom:
*FUEL GAUGE INACCURATE

POSSIBLE CAUSES
DTC PRESENT
FUEL LEVEL SENSOR
INTERMITTENT CONDITION
INSTRUMENT CLUSTER

TEST	ACTION	APPLICABILITY
1	Turn the ignition on. With the DRBIII®, read DTCs. Does the DRBIII® display Fuel Level Sensor Open or Fuel Level Sensor Short? Yes → Refer to Fuel Level Sensor Open or Fuel Level Sensor Short for the related symptom(s). No → Go To 2	All
2	Perform the Instrument Cluster Self Test. Turn the ignition off. Press and hold the Trip Reset button. Turn the ignition on. Observe the Fuel Gauge during the Self Test. The Fuel Gauge pointer should pause at each of these following positions: E, 1/2, Full. Did the Fuel Gauge perform the Self Test properly? Yes → Go To 3 No → Replace the Instrument Cluster in accordance with the Service Information. Perform BODY VERIFICATION TEST - VER 1.	All

*FUEL GAUGE INACCURATE — Continued

TEST	ACTION	APPLICABILITY
3	Turn the ignition off. Remove the Fuel Pump Module from the Fuel Tank. **NOTE: Inspect for physical obstructions in the Fuel Tank. Inspect the Fuel Level Sensor for bent or damaged parts.** Measure the resistance of the Fuel Level Sensor while moving the float arm through the complete range of motion. The Fuel Level Sensor should measure the following resistances: E = 184 - 204 ohms 1/4 = 360 - 410 ohms 1/2 = 565 - 585 ohms 3/4 = 741 - 791 ohms Full = 947 - 967 ohms **NOTE: The Fuel Level Sensor should read resistance through the full range of float arm motion.** Does the Fuel Level Sensor read the proper resistance values through the full range of motion? Yes → The condition is not present at this time. Monitor DRBIII® parameters while wiggling the related wire harness. Refer to any Technical Service Bulletins (TSB) that may apply. Visually inspect the related wiring harness and connector terminals. No → Replace the Fuel Level Sensor in accordance with the Service Information. Perform BODY VERIFICATION TEST - VER 1.	All

Symptom:

***HIGH BEAM INDICATOR INOPERATIVE**

POSSIBLE CAUSES
HIGH BEAM INDICATOR CIRCUIT OPEN
HIGH BEAM INDICATOR BULB
INSTRUMENT CLUSTER

TEST	ACTION	APPLICABILITY
1	**NOTE: Ensure that the High Beam headlamps operate properly before proceeding with this test.** Turn the ignition off. Disconnect the Instrument Cluster harness connector. Turn on the headlamps and actuate the High Beams. Using a 12-volt test light connected to ground, check the High Beam Indicator circuit. Does the test light illuminate brightly? Yes → Go To 2 No → Repair the High Beam Indicator circuit for an open. Perform BODY VERIFICATION TEST - VER 1.	All
2	Turn the ignition off. Disconnect the Instrument Cluster harness connector. Remove and inspect the High Beam Indicator bulb. Is the bulb open? Yes → Replace the High Beam Indicator bulb in accordance with the Service Information. Perform BODY VERIFICATION TEST - VER 1. No → Replace the Instrument Cluster in accordance with the Service Information. Perform BODY VERIFICATION TEST - VER 1.	All

Symptom:
*INSTRUMENT CLUSTER DIMMING INOPERATIVE

POSSIBLE CAUSES
DTC PRESENT
HEADLAMP SWITCH OUTPUT CIRCUIT OPEN
ILLUMINATION BULB
INSTRUMENT CLUSTER

TEST	ACTION	APPLICABILITY
1	Turn the ignition on. With the DRBIII®, read DTCs. Does the DRBIII® display Panel Dimmer Open? Yes → Refer to the Service Information to diagnose ″Panel Dimmer Open″. Perform BODY VERIFICATION TEST - VER 1. No → Go To 2	All
2	**NOTE: Ensure that the Park Lamps operate properly before proceeding with this test.** Turn the ignition off. Disconnect the Instrument Cluster harness connector. Turn the Park Lamps on. Using a 12-volt test light connected to ground, check the Headlamp Output circuit. Does the test light illuminate brightly? Yes → Go To 3 No → Repair the Headlamp Switch Output circuit for an open. Perform BODY VERIFICATION TEST - VER 1.	All
3	Turn the ignition off. Disconnect the Instrument Cluster harness connector. Inspect the Illumination Bulb in question. Is the Illumination Bulb filament open? Yes → Replace the Illumination Bulb in accordance with the Service Information. Perform BODY VERIFICATION TEST - VER 1. No → Replace the Instrument Cluster in accordance with the Service Information. Perform BODY VERIFICATION TEST - VER 1.	All

Symptom:
*LOW OIL PRESSURE INDICATOR ALWAYS ON

POSSIBLE CAUSES
ENGINE OIL PRESSURE SWITCH
ENGINE OIL PRESSURE SWITCH SENSE CIRCUIT SHORT TO GROUND
POWERTRAIN CONTROL MODULE
INSTRUMENT CLUSTER

TEST	ACTION	APPLICABILITY
1	**NOTE: Ensure that Engine oil pressure is within normal operating range. Refer to the Service Information for specifications.** Allow the engine to idle. With the DRBIII® in Sensors, read the Engine Oil Pressure Switch state. Does the Engine Oil Pressure Switch status read ″Closed″? Yes → Go To 2 No → Replace the Instrument Cluster in accordance with the Service Information. Perform BODY VERIFICATION TEST - VER 1.	All
2	Turn the ignition off. Disconnect the Engine Oil Pressure Switch harness connector. With the DRBIII® in Sensors, read the Engine Oil Pressure Switch status. Does the Engine Oil Pressure Switch status read ″Closed″? Yes → Go To 3 No → Replace the Engine Oil Pressure Switch in accordance with the Service Information. Perform BODY VERIFICATION TEST - VER 1.	All
3	Turn the ignition off. Disconnect the Engine Oil Pressure Switch harness connector. Disconnect the PCM (C1 connector on 2.0L equipped vehicles) harness connector. Measure the resistance between ground and the Engine Oil Pressure Switch Sense circuit. Is the resistance below 5.0 ohms? Yes → Repair the Engine Oil Pressure Switch Sense circuit for a short to ground. Perform BODY VERIFICATION TEST - VER 1. No → Replace the Powertrain Control Module in accordance with the Service Information.	All

Symptom:

*LOW OIL PRESSURE INDICATOR INOPERATIVE

POSSIBLE CAUSES
ENGINE OIL PRESSURE SWITCH
ENGINE OIL PRESSURE SWITCH SENSE CIRCUIT OPEN
INDICATOR LED
POWERTRAIN CONTROL MODULE
INSTRUMENT CLUSTER

TEST	ACTION	APPLICABILITY
1	Turn the ignition off. Perform the Instrument Cluster Self Test. Depress and hold the Trip Odometer reset button while turning the ignition on. Did the Low Oil Pressure Indicator illuminate? Yes → Go To 2 No → Go To 4	All
2	Turn the ignition on. With the DRBIII® in Sensors, read the Oil Pressure Switch state. Disconnect the Engine Oil Pressure Switch harness connector. With the DRBIII® in Sensors, read the Oil Pressure Switch state. Did the Engine Oil Pressure Switch change states? Yes → Replace the Engine Oil Pressure Switch in accordance with the Service Information. Perform BODY VERIFICATION TEST - VER 1. No → Go To 3	All
3	Turn the ignition off. Disconnect the Engine Oil Pressure Switch harness connector. Disconnect the PCM (C1 connector on 2.0L equipped vehicles) harness connector. Measure the resistance of the Engine Oil Pressure Switch Sense circuit. Is the resistance below 5.0 ohms? Yes → Replace the Powertrain Control Module in accordance with the Service Information. No → Repair the Engine Oil Pressure Switch Sense circuit for an open. Perform BODY VERIFICATION TEST - VER 1.	All

*LOW OIL PRESSURE INDICATOR INOPERATIVE — Continued

TEST	ACTION	APPLICABILITY
4	Turn the ignition off. Remove the Instrument Cluster. Remove the Low Oil Pressure indicator LED. Using a DVOM, select ″Diode Mode″, and attach the leads across the LED. **NOTE: Ensure that the RED lead is on the ″+″ of the LED.** Did the LED illuminate? Yes → Replace the Instrument Cluster in accordance with the Service Information. Perform BODY VERIFICATION TEST - VER 1. No → Replace the Low Oil Pressure Indicator LED in accordance with the Service Information. Perform BODY VERIFICATION TEST - VER 1.	All

Symptom:
*ONE GAUGE INOPERATIVE

POSSIBLE CAUSES
POWERTRAIN CONTROL MODULE DTCS
INSTRUMENT CLUSTER

TEST	ACTION	APPLICABILITY
1	Turn the ignition off. With the DRBIII®, read DTCs. **NOTE: The PCM will not store any DTCs regarding Oil Pressure concerns.** **NOTE: If Oil Pressure gauge readings are in question and the gauge tests good, a mechanical oil pressure gauge must be attached to the engine.** Does the DRBIII® display any PCM DTCs? Yes → Refer to the DRIVEABILITY category and perform the apropriate symptom. No → Go To 2	All
2	Perform the Instrument Cluster Self Test. Turn the ignition off. Press and hold the Trip Reset button. Turn the ignition on. Observe the gauge in question while the Instrument Cluster performs the Self Test. The gauges should position at the following calibration points: Speedometer: 30mph (51km/h BUX), 60mph (102km/h BUX), 90mph (153km/h BUX), 120mph Tachometer: 2000, 4000, 6000, 8000 Fuel: E, 1/2, Full Temperature: Lo, Mid Lo, High Did the gauge in question operate properly? Yes → Test Complete. No → Replace the Instrument Cluster in accordance with the Service Information. Perform BODY VERIFICATION TEST - VER 1.	All

Symptom:

***PRND OR AUTOSTICK INDICATOR DISPLAY INACCURATE OR INOPERATIVE**

POSSIBLE CAUSES
DTC PRESENT
INTERMITTENT CONDITION
INSTRUMENT CLUSTER

TEST	ACTION	APPLICABILITY
1	**NOTE: Ensure that there is communication between the MIC, PCM, and the TCM before proceeding with this test.** **NOTE: Diagnose and repair any DTCs before proceeding with this test.** **NOTE: Ensure that the TCM passes the Shift Lever Test with the DRBIII® before proceeding with this test.** Turn the ignition on. With the DRBIII®, read DTCs. Does the DRBIII® display any MIC, PCM, or TCM DTCs? Yes → Refer to symptom list for problems related to DTC's. No → Go To 2	All
2	Perform the Instrument Cluster Self Test. Turn the ignition off. Press and hold the Trip Reset button. Turn the ignition on. Observe the PRND / AutoStick VF display during the Self Test. Did any part of the VF display fail to illuminate? Yes → Replace the Instrument Cluster in accordance with the Service Information. Perform BODY VERIFICATION TEST - VER 1. No → The condition is not present at this time. Monitor DRBIII® parameters while wiggling the related wire harness. Refer to any Technical Service Bulletins (TSB) that may apply. Visually inspect the related wiring harness and connector terminals.	All

Symptom:
*REAR FOG LAMP INDICATOR INOPERATIVE - BUX ONLY

POSSIBLE CAUSES
REAR FOG LAMP INDICATOR CIRCUIT OPEN
INDICATOR LED
INSTRUMENT CLUSTER

TEST	ACTION	APPLICABILITY
1	**NOTE: Ensure that the Rear Fog Lamps operate correctly before proceeding with this test.** Turn the ignition off. Disconnect the Instrument Cluster harness connector. Turn the Rear Fog Lamp switch on. Using a 12-volt test light connected to ground, check the Rear Fog Lamp Indicator circuit. Does the test light illuminate brightly? Yes → Go To 2 No → Repair the Rear Fog Lamp Indicator circuit for an open. Perform BODY VERIFICATION TEST - VER 1.	All
2	Turn the ignition off. Remove the Instrument Cluster. Remove the inoperative LED. Using a DVOM, select "Diode Mode", and attach the leads across the LED. **NOTE: Ensure that the RED lead is on the "+" of the LED.** Did the LED illuminate? Yes → Replace the Instrument Cluster in accordance with the Service Information. Perform BODY VERIFICATION TEST - VER 1. No → Replace the Rear Fog Lamp Indicator LED in accordance with the Service Information. Perform BODY VERIFICATION TEST - VER 1.	All

Symptom:
*SEATBELT INDICATOR INOPERATIVE

POSSIBLE CAUSES
INDICATOR LED
SEAT BELT INDICATOR CIRCUIT OPEN
SEAT BELT SWITCH GROUND OPEN
SEAT BELT SWITCH
INSTRUMENT CLUSTER

TEST	ACTION	APPLICABILITY
1	Turn the ignition off. Perform the Instrument Cluster Self Test. Did the Seat Belt Indicator illuminate? Yes → Go To 3 No → Go To 2	All
2	Turn the ignition off. Remove the Instrument Cluster. Remove the inoperative indicator. Using a DVOM, select "Diode Mode", and attach the leads across the LED. **NOTE: Ensure that the RED lead is on the "+" of the LED.** Did the LED illuminate? Yes → Go To 3 No → Replace the Seat Belt Indicator LED in accordance with the Service Information. Perform BODY VERIFICATION TEST - VER 1.	All
3	Turn the ignition off. Disconnect the Instrument Cluster harness connector. Disconnect the Seat Belt Switch harness connector. Measure the resistance of the Seat Belt Indicator circuit. Is the resistance below 5.0 ohms? Yes → Go To 4 No → Repair the Seat Belt Indicator circuit for an open. Perform BODY VERIFICATION TEST - VER 1.	All
4	Turn the ignition off. Disconnect the Seat Belt Switch harness connector. Measure the resistance between ground and the Seat Belt Switch Ground circuit. Is the resistance below 5.0 ohms? Yes → Go To 5 No → Repair the Seat Belt Switch Ground circuit for an open. Perform BODY VERIFICATION TEST - VER 1.	All

*SEATBELT INDICATOR INOPERATIVE — Continued

TEST	ACTION	APPLICABILITY
5	Turn the ignition off. Disconnect the Seat Belt Switch harness connector. Measure the resistance of the Seat Belt Switch between the Indicator circuit pin and the Ground circuit pin. Is the resistance below 5.0 ohms? Yes → Replace the Instrument Cluster in accordance with the Service Information. Perform BODY VERIFICATION TEST - VER 1. No → Replace the Seat Belt Switch in accordance with the Service Information. Perform BODY VERIFICATION TEST - VER 1.	All

Symptom:

***VF DISPLAY INOPERATIVE**

POSSIBLE CAUSES
INSTRUMENT CLUSTER

TEST	ACTION	APPLICABILITY
1	Ensure that the Instrument Cluster communicates on the PCI Bus. **NOTE: The Instrument Cluster must be operational for the result of this test to be valid.** The Instrument Cluster Odometer vacuum fluorescent (VF) Display is not a repairable or replaceable item. If there are no possible causes remaining, view repair. Repair Replace the Instrument Cluster in accordance with the Service Information. Perform BODY VERIFICATION TEST - VER 1.	All

Symptom:

*COURTESY LAMPS INOPERATIVE - ALL LAMPS

POSSIBLE CAUSES
FUSED B+ CIRCUIT OPEN
INSTRUMENT CLUSTER - COURTESY LAMP OPEN
COURTESY LAMP DRIVER CIRCUIT OPEN
INTERMITTENT CONDITION

TEST	ACTION	APPLICABILITY
1	Remove the dome lamp lens. Remove and ensure the bulb is good. Using a 12-volt test light connected to ground, check the Fused B+ circuit. Does the test light illuminate brightly? Yes → Go To 2 No → Repair the open Fused B+ Circuit. Perform BODY VERIFICATION TEST - VER 1.	All
2	Disconnect the Instrument Cluster. Connect a jumper wire between the Courtesy Lamp Driver Circuit and ground. Observe the Dome Lamp. Does the test light illuminate brightly? Yes → Replace the Instrument Cluster. Perform BODY VERIFICATION TEST - VER 1. No → Go To 3	All
3	Remove the dome lamp bulb. Disconnect the Instrument Cluster. Connect a jumper wire between the Courtesy Lamp Driver Circuit in the Instrument Cluster connector and ground. Measure the resistance of the Courtesy Lamp Driver Circuit from the Dome Lamp to the Instrument Cluster connector. Is the resistance below 5.0 ohms? Yes → The condition that caused this symptom is currently not present. Inspect the related wiring for a possible intermittent condition. Look for any chafed, pierced, pinched or partially broken wires. Perform BODY VERIFICATION TEST - VER 1. No → Repair the open Courtesy Lamp Driver Circuit. Perform BODY VERIFICATION TEST - VER 1.	All

Symptom:

***COURTESY LAMPS ON AT ALL TIMES**

POSSIBLE CAUSES
DRIVERS DOOR AJAR SWITCH
DRIVERS DOOR AJAR SWITCH SENSE WIRE SHORT TO GROUND
REMOTE KEYLESS ENTRY MODULE - IF EQUIPPED
INSTRUMENT CLUSTER
INSTRUMENT CLUSTER
PANEL LAMPS DIMMER SIGNAL WIRE SHORT TO GROUND
MULTIFUNCTION SWITCH
OPEN DOOR AJAR SWITCH
REMOTE KEYLESS ENTRY MODULE - IF EQUIPPED
PASSENGER DOOR AJAR/RKE SENSE WIRE SHORT TO GROUND
INSTRUMENT CLUSTER
COURTESY LAMP DRIVER CIRCUIT SHORT TO GROUND
INSTRUMENT CLUSTER

TEST	ACTION	APPLICABILITY
1	Close all the doors. Turn the Panel Lamps Dimmer Switch to the MID position. With the DRBIII®, read the Electro/Mech Cluster, I/O's. Observe the: Drv Door Ajar Sw, Dome Lamp, and the Pass Door Ajar Sw Output. Does the DRBIII® read as follows? Drv Door Ajar: CLOSED Go To 2 Dome Lamp Output: ON Go To 5 Pass Door Ajar Sw: CLOSED Go To 7 No → Go To 10	All
2	Open the Drivers door. Disconnect the Driver Door Ajar Switch connector. With the DRBIII® select: Body, Electro/Mech Cluster, Input/Output. Read the: Drv Door Ajar Sw - state. Does the DRBIII® show: Open? Yes → Replace the Drivers Door Ajar Switch. Perform BODY VERIFICATION TEST - VER 1. No → Go To 3	All

*COURTESY LAMPS ON AT ALL TIMES — Continued

TEST	ACTION	APPLICABILITY
3	Turn the ignition off. Disconnect the Driver Door Ajar Switch connector. Disconnect the Instrument Cluster connector. Disconnect the RKE Module connector - If Equipped. Measure the resistance of the Driver Door Ajar Switch Sense Circuit from the door ajar switch connector to ground. Is the resistance below 100.0 ohms? Yes → Repair the Drivers Door Ajar Switch Sense Wire for a short to ground. Perform BODY VERIFICATION TEST - VER 1. No → Go To 4	All
4	Ensure the Instrument Cluster is connected. Disconnect the RKE Module connector. With the DRBIII® select: Body, Electro/Mech Cluster, Input/Output. Read the: Drv Door Ajar Sw - state Does the DRBIII® show: Drv Door Ajar Sw:Open? Yes → Replace the Remote Keyless Entry Module. Perform BODY VERIFICATION TEST - VER 1. No → Replace the Instrument Cluster. Perform BODY VERIFICATION TEST - VER 1.	All
5	Turn the Panel Lamps Dimmer to the MID position. Remove the Instrument Cluster. Measure the resistance between ground and the Panel Lamps Dimmer Signal Circuit in the C2 connector. Is the resistance below 100.0 ohms? Yes → Go To 6 No → Replace the Instrument Cluster. Perform BODY VERIFICATION TEST - VER 1.	All
6	Disconnect the Instrument Cluster. Disconnect the Multifunction Switch connector. Measure the resistance of the Panel Lamps Dimmer Signal Circuit in the instrument cluster connector to ground. Is the resistance below 200.0 ohms? Yes → Repair the Panel Lamps Dimmer Signal Wire for a short to ground. Perform BODY VERIFICATION TEST - VER 1. No → Replace the Multifunction Switch. Perform BODY VERIFICATION TEST - VER 1.	All
7	Close all the passenger doors. With the DRBIII® select: Body, Electro/Mech Cluster, Input /Output. Read the, Pas Door Ajar Sw - state. Remove each passenger door ajar switch and observe the DRBIII®. Did the DRBIII® change states to read: Pas Door Ajar Sw: Open? Yes → Replace the applicable open Door Ajar Switch. Perform BODY VERIFICATION TEST - VER 1. No → Go To 8	All

*COURTESY LAMPS ON AT ALL TIMES — Continued

TEST	ACTION	APPLICABILITY
8	Remove all 3 passenger door ajar switches. With the DRBIII®,select: Body,Electro/Mech Cluster,Input/Output. Read the Pas Door Ajar Sw-state. Disconnect the RKE Module connector while observing the DRBIII®. Did the DRBIII® show, Pas Door Ajar Sw: Open? Yes → Replace the Remote Keyless Entry Module. Perform BODY VERIFICATION TEST - VER 1. No → Go To 9	All
9	Turn the ignition off. Disconnect all 3 passenger door ajar switches. Disconnect the RKE Module connector - If Equipped. Disconnect the Instrument Cluster connector. Measure the resistance of the Passenger Door Ajar Circuit in the Passenger Door Ajar Switch connector. Is the resistance below 100.0 ohms? Yes → Repair the Passenger Door Ajar/RKE Sense Wire for a short to ground. Perform BODY VERIFICATION TEST - VER 1. No → Replace the Instrument Cluster. Perform BODY VERIFICATION TEST - VER 1.	All
10	Turn the Panel Lamps Dimmer to the MID position. Disconnect the Instrument Cluster Connector. Measure the resistance between ground and the Courtesy Lamp Driver Circuit. Is the resistance below 100.0 ohms? Yes → Repair the Courtesy Lamp Driver Circuit for a short to ground. Perform BODY VERIFICATION TEST - VER 1. No → Replace the Instrument Cluster. Perform BODY VERIFICATION TEST - VER 1.	All

Symptom:
*ILLUMINATED ENTRY INOPERATIVE

POSSIBLE CAUSES
COURTESY LAMPS OPERATIONAL
INTERMITTENT CONDITION
ILLUMINATED ENTRY NOT ENABLED

TEST	ACTION	APPLICABILITY
1	Check the Courtesy Lamps for proper operation. Does the Courtesy Lamp operate properly from the Door Ajar Switches and the Dome Light Switch? Yes → Go To 2 No → Refer to Symptom list for problems related to COURTESY LAMPS INOPERATIVE. Perform BODY VERIFICATION TEST - VER 1.	All
2	With the DRBIII® select: THEFT ALARM - VTSS - MISCELLANEOUS - ENABLE ILLUMINATED ENTRY. With the DRBIII®, read the ILLUMINATED ENTRY status. Does the DRBIII® display ENABLED? Yes → The condition that caused this symptom is currently not present. Inspect the related wiring harness for a possible intermittent condition. Look for any chafed, pierced, pinched or partially broken wires. Perform BODY VERIFICATION TEST - VER 1. No → With the DRB, enable the Illuminated Entry. Perform BODY VERIFICATION TEST - VER 1.	All

Symptom:
BODY STYLE MISMATCH

When Monitored and Set Condition:

BODY STYLE MISMATCH

When Monitored: When the ignition is in the run position during Remote Keyless Entry Module configuration.

Set Condition: Once the body style configuration is complete, the RKE compares its configuration information with the PCI bus message transmitted by the Powertrain Control Module pertaining to body style. A miscomparison will result in setting the trouble code.

POSSIBLE CAUSES
BODY STYLE MISMATCH

Repair Instructions:

BODY STYLE MISMATCH

With the DRBIII select: "Theft Alarm", "Miscellaneous", "Configure Module" and follow instructions on the screen.

Perform BODY VERIFICATION TEST - VER 1.

Symptom:
DRIVER DOOR SWITCH SHORTED OR STUCK

When Monitored and Set Condition:

DRIVER DOOR SWITCH SHORTED OR STUCK

When Monitored: Whenever the RKE module is connected and battery voltage is above 10.0 volts.

Set Condition: When a lock or unlock input from the driver door switch to the RKE module is present for more than 8 seconds.

POSSIBLE CAUSES
DTC PRESENT
REMOTE KEYLESS ENTRY MODULE - SHORTED
DOOR LOCK SWITCH SHORTED
CYLINDER LOCK SWITCH SHORTED
DRIVER DOOR SWITCH MUX CIRCUIT SHORT TO GROUND.

TEST	ACTION	APPLICABILITY
1	Turn the ignition on. With the DRBIII®, erase DTCs. Operate the door locks several times from the driver door lock switch and the cylinder lock switch if VTSS equipped.. With the DRBIII®, read DTCs. Does the DRBIII® display: DRIVER DOOR SWITCH FAILURE? Yes → Go To 2 No → The causes for setting this code are not present at this time. Using the wiring diagram/schematic as a guide, inspect the wiring and connectors. Perform BODY VERIFICATION TEST - VER 1.	All
2	Disconnect the Remote Keyless Entry module connector. Turn the ignition off. Measure the resistance between ground and the driver Door Switch Mux circuit (cavity 10) in the RKE module connector Is the resistance below 8000.0 ohms? Yes → Go To 3 No → Replace the Remote Keyless Entry module. Perform BODY VERIFICATION TEST - VER 1.	All

DRIVER DOOR SWITCH SHORTED OR STUCK — Continued

TEST	ACTION	APPLICABILITY
3	**NOTE: This test is for vehicles with VTSS. If this vehicle is not equipped with VTSS, answer YES to the question and continue.** Turn the ignition off. Disconnect the Remote Keyless Entry module connector. Remove the driver door inner trim panel. Disconnect the Cylinder Lock Switch connector. Measure the resistance between ground and the driver Door Switch Mux circuit (cavity 10). Is the resistance below 8000.0 ohms? Yes → Go To 4 No → Replace the Cylinder Lock Switch. Perform BODY VERIFICATION TEST - VER 1.	All
4	Turn the ignition off. Disconnect the Door Lock Switch connector. Disconnect the Remote Keyless Entry module connector. Measure the resistance between ground and the driver Door Switch Mux circuit (cavity 10). Is the resistance below 8000.0 ohms? Yes → Repair the Driver Door Switch Mux circuit for a short to ground. Perform BODY VERIFICATION TEST - VER 1. No → Replace the Door Lock Switch. Perform BODY VERIFICATION TEST - VER 1.	All

Symptom:

INCORRECT MODULE TYPE CONFIGURATION FOR PART NUMBER

When Monitored and Set Condition:

INCORRECT MODULE TYPE CONFIGURATION FOR PART NUMBER

When Monitored: When the ignition is in the run position during Remote Keyless Entry Module configuration.

Set Condition: When the operator attempts to choose a configuration which is not compatible with the part number. Example: Selecting BUX RKE when the module is a Domestic part number, The RKE frequencies are not compatible.

POSSIBLE CAUSES
INCORRECT MODULE TYPE CONFIGURATION FOR PART NUMBER

TEST	ACTION	APPLICABILITY
1	Ensure the module type corresponds with the correct module part number. If the module type corresponds with the module part number the RKE module is defective. If there are no possible causes remaining, view repair. Repair Replace the Remote Keyless Entry Module. Perform BODY VERIFICATION TEST - VER 1.	All

Symptom:
INTERIOR DECKLID RELEASE SWITCH SHORTED OR STUCK

When Monitored and Set Condition:

INTERIOR DECKLID RELEASE SWITCH SHORTED OR STUCK

When Monitored: Whenever the RKE module is connected and the battery is above 10.0 volts..

Set Condition: When a decklid release input is present for more than 8 seconds.

POSSIBLE CAUSES
DTC PRESENT
DECKLID RELEASE SWITCH SHORT TO GROUND.
DECKLID RELEASE RELAY CONTROL CIRCUIT SHORT TO GROUND.
REMOTE KEYLESS ENTRY MODULE - SHORTED

TEST	ACTION	APPLICABILITY
1	With the DRBIII®, erase DTCs. Turn the ignition on. Operate the decklid release from the interior switch. With the DRBIII®, read DTCs. Does the DRBIII® display: INTERIOR DECKLID RELEASE SWITCH SHORTED OR STUCK? Yes → Go To 2 No → The causes for setting this code are not present at this time. Using the wiring diagram/schematic as a guide, inspect the wiring and connectors. Perform BODY VERIFICATION TEST - VER 1.	All
2	Disconnect the interior Decklid Release Switch connector. Turn the ignition on. Measure the voltage between ground and the Decklid Release Relay Control circuit in the switch connector Is the voltage above 10.0 volts? Yes → Replace the Decklid Release Switch. Perform BODY VERIFICATION TEST - VER 1. No → Go To 3	All

INTERIOR DECKLID RELEASE SWITCH SHORTED OR STUCK — Continued

TEST	ACTION	APPLICABILITY
3	Disconnect the RKE module connector. Disconnect the interior Decklid Release Switch connector. Measure the resistance between ground and the Decklid Release Relay Control circuit. Is the resistance below 1000.0 ohms? Yes → Repair the Decklid Release Relay Control circuit for a short to ground. Perform BODY VERIFICATION TEST - VER 1. No → Replace the Remote Keyless Entry module. Perform BODY VERIFICATION TEST - VER 1.	All

Symptom:
MODULE NOT CONFIGURED FOR RKE

When Monitored and Set Condition:

MODULE NOT CONFIGURED FOR RKE

When Monitored: When the ignition is in the run position during Remote Keyless Entry transmitter programming.

Set Condition: When the operator attempts to program a transmitter and the RKE module is not configured for RKE.

POSSIBLE CAUSES
MODULE NOT CONFIGURED FOR RKE

TEST	ACTION	APPLICABILITY
1	The RKE transmitter will not program because the module is not configured for RKE. View repair. Repair Using the DRBIII®, configure the module for Remote Keyless Entry. Perform BODY VERIFICATION TEST - VER 1.	All

Symptom:
NO AIRBAG MESSAGES RECEIVED

When Monitored and Set Condition:

NO AIRBAG MESSAGES RECEIVED

When Monitored: With the ignition on or in the run position.

Set Condition: The RKE Module does not receive any airbag messages for 12 seconds.

POSSIBLE CAUSES
ATTEMPT TO COMMUNICATE WITH THE ACM
RKE MODULE

TEST	ACTION	APPLICABILITY
1	Turn the ignition on. With the DRB, attempt to communicate with the ACM. Was the DRB able to I/D or communicate with the ACM? Yes → Go To 2 No → Refer to the Communication category for the related symptom(s). Perform BODY VERIFICATION TEST - VER 1.	All
2	With the DRB, erase DTC's. Turn the ignition on and wait approximately 1 minute. With the DRB, read DTC's. Did this DTC reset? Yes → Replace the Remote Keyless Entry Module. Perform BODY VERIFICATION TEST - VER 1. No → Test Complete.	All

Symptom:
NO PCM MESSAGES RECEIVED

When Monitored and Set Condition:

NO PCM MESSAGES RECEIVED

When Monitored: With the ignition on or in the run position.

Set Condition: The RKE Module does not receive any PCM messages for 12 seconds.

POSSIBLE CAUSES
NO PCM MESSAGES RECEIVED
ATTEMPT TO COMMUNICATE WITH THE PCM
PCI BUS CIRCUIT OPEN
POWERTRAIN CONTROL MODULE

TEST	ACTION	APPLICABILITY
1	Turn the ignition on. With the DRB, enter SYSTEM MONITORS then J1850 MODULE SCAN. Is the PCM present on the bus? Yes → With the DRB, erase DTCs. Cycle the ignition switch and check for DTCs. If DTC resets, replace the RKE Module. Perform BODY VERIFICATION TEST - VER 1. No → Go To 2	All
2	Turn the ignition on. With the DRB, attempt to communicate with the PCM. Was the DRB able to communicate with the PCM? Yes → Go To 3 No → Refer to the communication category and perform the appropriate symptom. Perform BODY VERIFICATION TEST - VER 1.	All
3	Turn the ignition off. Disconnect the PCM harness connectors. Disconnect the RKE Module harness connector. Measure the resistance of the PCI Bus circuit between the RKE Module connector and the PCM connector. Is the resistance below 5.0 ohms? Yes → Replace the Powertrain Control Module. Perform BODY VERIFICATION TEST - VER 1. No → Repair the PCI Bus circuit for an open. Perform BODY VERIFICATION TEST - VER 1.	All

Symptom:
NO SKIM MESSAGES RECEIVED

When Monitored and Set Condition:

NO SKIM MESSAGES RECEIVED

When Monitored: With the ignition on or in the run position.

Set Condition: The RKE Module does not receive any SKIM messages for 12 seconds.

POSSIBLE CAUSES
ATTEMPT TO COMMUNICATE WITH THE SKIM
RKE MODULE

TEST	ACTION	APPLICABILITY
1	Turn the ignition on. With the DRB, attempt to communicate with the SKIM. Was the DRB able to I/D or communicate with the SKIM? Yes → Go To 2 No → Refer to the Communication category for the related symptom(s). Perform BODY VERIFICATION TEST - VER 1.	All
2	With the DRB, erase DTC's. Turn the ignition on and wait approximately 1 minute. With the DRB, read DTC's. Did this DTC reset? Yes → Replace the Remote Keyless Entry Module. Perform BODY VERIFICATION TEST - VER 1. No → Test Complete.	All

Symptom:
PASSENGER DOOR SWITCH FAILURE

When Monitored and Set Condition:

PASSENGER DOOR SWITCH FAILURE

When Monitored: Whenever the RKE module is connected and battery voltage is above 10.0 volts.

Set Condition: When a lock or unlock input from the passenger door switch to the RKE module is present for more than 8 seconds.

POSSIBLE CAUSES
DTC PRESENT
REMOTE KEYLESS ENTRY MODULE - SHORTED
DOOR LOCK SWITCH SHORTED
CYLINDER LOCK SWITCH SHORTED - EXPORT ONLY
PASSENGER DOOR SWITCH MUX CIRCUIT SHORT TO GROUND.

TEST	ACTION	APPLICABILITY
1	Turn the ignition on. With the DRBIII®, erase DTCs. Operate the door locks several times from the passenger door lock switch and the cylinder lock switch if VTSS equipped.. With the DRBIII®, read DTCs. Does the DRBIII® display: PASS DOOR SWITCH FAILURE? Yes → Go To 2 No → The causes for setting this code are not present at this time. Using the wiring diagram/schematic as a guide, inspect the wiring and connectors. Perform BODY VERIFICATION TEST - VER 1.	All
2	Disconnect the Remote Keyless Entry module connector. Turn the ignition off. Measure the resistance between ground and the passenger Door Switch Mux circuit (cavity 11) in the RKE module connector Is the resistance below 8000.0 ohms? Yes → Go To 3 No → Replace the Remote Keyless Entry module. Perform BODY VERIFICATION TEST - VER 1.	All

PASSENGER DOOR SWITCH FAILURE — Continued

TEST	ACTION	APPLICABILITY
3	**NOTE: This test is for an EXPORT vehicle only. If this is a DOMESTIC vehicle, answer YES to the question and continue.** Turn the ignition off. Disconnect the Remote Keyless Entry module connector. Remove the passenger door inner trim panel. Disconnect the Cylinder Lock Switch connector. Measure the resistance between ground and the passenger Door Switch Mux circuit (cavity 11). Is the resistance below 8000.0 ohms? Yes → Go To 4 No → Replace the Cylinder Lock Switch. Perform BODY VERIFICATION TEST - VER 1.	All
4	Turn the ignition off. Disconnect the Door Lock Switch connector. Disconnect the Remote Keyless Entry module connector. Measure the resistance between ground and the passenger Door Switch Mux circuit (cavity 11). Is the resistance below 8000.0 ohms? Yes → Repair the passenger Door Switch Mux circuit for a short to ground. Perform BODY VERIFICATION TEST - VER 1. No → Replace the Door Lock Switch. Perform BODY VERIFICATION TEST - VER 1.	All

Symptom:

***ALL DOOR LOCKS INOPERATIVE**

POSSIBLE CAUSES
DECKLID RELEASE RELAY OUTPUT WIRE SHORT TO GROUND
FUSED B(+) CIRCUIT OPEN
FUSED B(+) WIRE SHORT TO GROUND.
GROUND CIRCUIT OPEN
DOOR LOCK RELAY OUTPUT CIRCUIT OPEN
DRIVER DOOR UNLOCK RELAY OUTPUT SHORT TO DOOR LOCK RELAY OUTPUT
DRIVER DOOR UNLOCK RELAY OUTPUT WIRE SHORT TO GROUND
DOOR LOCK RELAY OUTPUT WIRE SHORT TO GROUND
DOOR UNLOCK RELAY OUTPUT SHORT TO DOOR LOCK RELAY OUTPUT
DECKLID RELEASE SOLENOID-SHORTED
DOOR UNLOCK RELAY OUTPUT WIRE SHORT TO GROUND
DEFECTIVE FUSE #14
RKE MODULE - B(+) SHORT TO GROUND
RKE MODULE - RELAYS OPEN
RKE MODULE - SHORTED

TEST	ACTION	APPLICABILITY
1	**Note: Ensure there is communication with the RKE module (with the DRB select "Vehicle Theft") before proceeding. If not, refer to the "COMMUNICATION" catagory.** Test Fuse #14 in the fuse block. Is the fuse open? Yes → Go To 2 No → Go To 13	All
2	Turn ignition off. Remove Fuse #14 in the Fuse Block. Measure the resistance of the fused B(+) circuit from the fuse output cavity to ground. Is the resistance below 100.0 ohms? Yes → Go To 3 No → Go To 4	All

*ALL DOOR LOCKS INOPERATIVE — Continued

TEST	ACTION	APPLICABILITY
3	Turn ignition off. Remove Fuse #14 in the Fuse Block. Disconnect the RKE Module connector. Measure the resistance of the fused B(+) circuit (cavity #3) in the RKE connector to ground. Is the resistance below 100.0 ohms? Yes → Repair fused B(+) wire for a short to ground and replace blown fuse. Perform BODY VERIFICATION TEST - VER 1. No → Replace the Remote Keyless Entry Module and replace the blown fuse. Perform BODY VERIFICATION TEST - VER 1.	All
4	Replace fuse #14. Operate all the door locks including the decklid release (if equipped). Did the system operate properly without blowing the fuse? Yes → Test complete. If Fuse #14 blows again, check with the customer as to when it blew and rerun this test. Perform BODY VERIFICATION TEST - VER 1. No → Go To 5	All
5	Disconnect the Remote Keyless Entry module connector. Measure the resistance of the Decklid Release Relay Output circuit to ground. Is the resistance below 0.5 ohms? Yes → Go To 6 No → Go To 7	All
6	Disconnect the Remote Keyless Entry module connector. Disconnect the Decklid Solenoid connector. Measure the resistance of the Decklid Release Relay Output circuit to ground. Is the resistance below 100.0 ohms? Yes → Repair the Decklid Release Relay Output wire for a short to ground. Perform BODY VERIFICATION TEST - VER 1. No → Replace the Decklid Release Solenoid. Perform BODY VERIFICATION TEST - VER 1.	All
7	Turn ignition off. Disconnect the Remote Keyless Entry module connector. Measure the resistance of the Driver Door Unlock Relay Output circuit in the RKE module connector to ground. Is the resistance below 1000.0 ohms? Yes → Repair the Driver Door Unlock Relay Output wire for a short to ground. Perform BODY VERIFICATION TEST - VER 1. No → Go To 8	All

*ALL DOOR LOCKS INOPERATIVE — Continued

TEST	ACTION	APPLICABILITY
8	Disconnect the Remote Keyless Entry module connector. Measure the resistance of the Door Lock Relay Output circuit in the RKE module connector to ground. Is the resistance below 1000.0 ohms? Yes → Repair the Door Lock Relay Output wire for a short to ground. Perform BODY VERIFICATION TEST - VER 1. No → Go To 9	All
9	Turn ignition off. Disconnect the Remote Keyless Entry module connector. Measure the resistance of the Door Unlock Relay Output circuit in the RKE module connector to ground. Is the resistance below 1000.0 ohms? Yes → Repair the Door Unlock Relay Output wire for a short to ground. Perform BODY VERIFICATION TEST - VER 1. No → Go To 10	All
10	Disconnect the Remote Keyless Entry module connector. Measure the resistance between the Driver Door Unlock Relay Output circuit and the Door Lock Relay Output circuit in the RKE module connector.. Is the resistance below 3.5 ohms? Yes → Repair the Driver Door Unlock Relay Output circuit for a short to the Door Lock Relay Output circuit. Perform BODY VERIFICATION TEST - VER 1. No → Go To 11	All
11	Disconnect the Remote Keyless Entry module connector. Measure the resistance between the Door Unlock Relay Output circuit and the Door Lock Driver Relay Output in the RKE module connector.. Is the resistance below 1.5 ohms? Yes → Repair the Door Unlock Relay Output circuit for a short to the Door Lock Relay Output circuit. Perform BODY VERIFICATION TEST - VER 1. No → Go To 12	All
12	If there are no possible causes remaining, view repair. Repair Replace the Remote Keyless Entry Module and replace the fuse. Perform BODY VERIFICATION TEST - VER 1.	All
13	Disconnect the RKE Module connector. Using a test light, test both sides of Fuse #14 to ensure the fuse is Okay and that the 12.0 volt supply is not open. Measure the Voltage of the Fused B(+) circuit (cavity #3) in the RKE Module connector. Is the voltage above 10.0 volts? Yes → Go To 14 No → Repair the open Fused B(+) wire from the RKE Module connector to the fuse. Perform BODY VERIFICATION TEST - VER 1.	All

*ALL DOOR LOCKS INOPERATIVE — Continued

TEST	ACTION	APPLICABILITY
14	Turn ignition off. Disconnect the RKE Module connector. Measure the resistance of the ground circuit (cavity #8) in the RKE Module connector. Is the resistance below 5.0 ohms? Yes → Go To 15 No → Repair the open ground circuit. Perform BODY VERIFICATION TEST - VER 1.	All
15	Disconnect the Remote Keyless Entry module connector. Measure the resistance between the Driver Door Unlock Relay Output circuit and the Door Lock Relay Output circuit in the RKE module connector.. Is the resistance LESS than 17.0 ohms? Yes → Go To 16 No → Repair the open Door Lock Relay Output circuit. Perform BODY VERIFICATION TEST - VER 1.	All
16	If there are no possible causes remaining, view repair. Repair Replace the Remote Keyless Entry Module (relays open). Perform BODY VERIFICATION TEST - VER 1.	All

Symptom:

***ALL DOORS EXCEPT DRIVER FAIL TO LOCK AND UNLOCK**

POSSIBLE CAUSES
RKE MODULE - OPEN DOOR UNLOCK RELAY OUTPUT
DOOR UNLOCK RELAY OUTPUT WIRE OPEN
DOOR LOCK RELAY OUTPUT WIRE OPEN
OPEN MOTORS

TEST	ACTION	APPLICABILITY
1	Disconnect the Remote Keyless Entry module connector. Lower the passenger door window. Connect a jumper wire between the Door Lock Relay Output ckt and the Ground ckt in the RKE module connector. Connect a jumper wire to the Door Unlock Relay Output ckt and momentarily touch it to the Fused B(+) ckt and observe the passenger door locks. Reverse the jumper wires to drive the motors in the opposite direction. Did the passenger doors Lock and Unlock? Yes → Replace the Remote Keyless Entry Module. Perform BODY VERIFICATION TEST - VER 1. No → Go To 2	All
2	Turn the ignition off. Remove the passenger door inner trim panel to gain access to the door lock motor connector. Disconnect the Passenger Door Lock Motor/Ajar Switch connector. Disconnect the Remote Keyless Entry Module connector. Measure the resistance of the Door Unlock Relay Output circuit between the RKE module connector and the Door Lock Motor/Ajar Switch connector. Is the resistance below 5.0 ohms? Yes → Go To 3 No → Repair the Door Unlock Relay Output circuit for an open. Perform BODY VERIFICATION TEST - VER 1.	All
3	Turn the ignition off. Remove the passenger door inner trim panel to gain access to the door lock motor connector. Disconnect the Passenger Door Lock Motor/Ajar Switch connector. Disconnect the Remote Keyless Entry Module connector. Measure the resistance of the Door Lock Relay Output circuit between the RKE module connector and the Door Lock Motor/Ajar Switch connector. Is the resistance below 5.0 ohms? Yes → Go To 4 No → Repair the Door Lock Relay Output circuit for an open. Perform BODY VERIFICATION TEST - VER 1.	All
4	If there are no possible causes remaining, view repair. Repair Replace the Door Lock Motors as necessary. Perform BODY VERIFICATION TEST - VER 1.	All

Symptom:

***ALL DOORS EXCEPT DRIVER FAIL TO UNLOCK**

POSSIBLE CAUSES
DOOR UNLOCK RELAY OUTPUT CIRCUIT SHORT TO GROUND
REMOTE KEYLESS ENTRY MODULE - UNLOCK RELAY

TEST	ACTION	APPLICABILITY
1	Turn the ignition off. Disconnect the Remote Keyless Entry module connector. Measure the resistance between ground and the Door Unlock Relay Output circuit. Is the resistance below 1000.0 ohms? Yes → Repair the Door Unlock Relay Output circuit for a short to ground. Perform BODY VERIFICATION TEST - VER 1. No → Replace the Remote Keyless Entry Module. Perform BODY VERIFICATION TEST - VER 1.	All

Symptom:

***ALL DOORS FAIL TO LOCK**

POSSIBLE CAUSES
DOOR LOCK RELAY OUTPUT CIRCUIT SHORT TO GROUND
DECKLID RELEASE RELAY OUTPUT SHORT TO DOOR LOCK RELAY OUTPUT
DECKLID RELEASE RELAY OUTPUT SHORT TO DRIVER DOOR UNLOCK RELAY OUTPUT
DECKLID RELEASE RELAY OUTPUT SHORT TO DOOR UNLOCK RELAY OUTPUT
REMOTE KEYLESS ENTRY MODULE - UNLOCK GROUND OPEN

TEST	ACTION	APPLICABILITY
1	Disconnect the Remote Keyless Entry module connector. Measure the resistance of the Door Lock Relay Output circuit in the RKE module connector to ground. Is the resistance below 1000.0 ohms? Yes → Repair the Door Lock Relay Output circuit for a short to ground. Perform BODY VERIFICATION TEST - VER 1. No → Go To 2	All
2	Disconnect the Remote Keyless Entry module connector. Measure the resistance between the Decklid Release Relay Output terminal and the Door Lock Relay Output terminal in the RKE Module connector. Is the resistance below 100.0 ohms? Yes → Repair the Decklid Release Relay Output wire for a short to the Door lock Relay Output wire. Perform BODY VERIFICATION TEST - VER 1. No → Go To 3	All
3	Disconnect the Remote Keyless Entry module connector. Measure the resistance between the Decklid Release Relay Output terminal and the Driver Door Unlock Relay Output terminal in the RKE Module connector. Is the resistance below 100.0 ohms? Yes → Repair the Decklid Release Relay Output wire for a short to the Driver Door Unlock Relay Output wire. Perform BODY VERIFICATION TEST - VER 1. No → Go To 4	All
4	Disconnect the Remote Keyless Entry module connector. Measure the resistance between the Decklid Release Relay Output terminal and the Door Unlock Relay Output terminal in the RKE Module connector. Is the resistance below 100.0 ohms? Yes → Repair the Decklid Release Relay Output wire for a short to the Door Unlock Relay Output wire. Perform BODY VERIFICATION TEST - VER 1. No → Go To 5	All

*ALL DOORS FAIL TO LOCK — Continued

TEST	ACTION	APPLICABILITY
5	If there are no possible causes remaining, view repair. Repair Replace the Remote Keyless Entry Module. Perform BODY VERIFICATION TEST - VER 1.	All

Symptom:

***ALL LOCKS INOPERATIVE FROM A DOOR LOCK SWITCH**

POSSIBLE CAUSES
DTC PRESENT
DOOR SWITCH GROUND WIRE OPEN
DOOR SWITCH MUX WIRE SHORT TO VOLTAGE
DOOR SWITCH MUX WIRE OPEN
DOOR LOCK SWITCH - OPEN
REMOTE KEYLESS ENTRY MODULE - HIGH VOLTAGE
REMOTE KEYLESS ENTRY MODULE - LOW VOLTAGE

TEST	ACTION	APPLICABILITY
1	With the DRBIII®, read DTCs. Are there any POWER DOOR LOCK related Trouble Codes? Yes → Refer to symptom list for problems related to POWER DOOR LOCKS. Perform BODY VERIFICATION TEST - VER 1. No → Go To 2	All
2	With the DRBIII® in Sensors, read the appropriate DOOR LOCK SW voltage.. Select the reading found: Between 0.0 and 3.7 volts. Replace the Remote Keyless Entry module. Perform BODY VERIFICATION TEST - VER 1. Between 4.9 and 5.5 volts. Go To 3 Above 5.6 volts. Go To 6	All
3	Turn the ignition off. Disconnect the Door Lock Switch connector. Measure the resistance between ground and the Ground circuit in the appropriate Door Lock Switch connector.. Is the resistance below 5.0 ohms? Yes → Go To 4 No → Repair the Ground circuit for an open. Perform BODY VERIFICATION TEST - VER 1.	All

*ALL LOCKS INOPERATIVE FROM A DOOR LOCK SWITCH — Continued

TEST	ACTION	APPLICABILITY
4	Turn the ignition off. Disconnect the Remote Keyless Entry Module connector. Disconnect the Door Lock Switch connector. Measure the resistance of the appropriate Door Switch Mux circuit between the RKE connector and the Door Lock Switch connector. Is the resistance below 5.0 ohms? Yes → Go To 5 No → Repair the Door Switch Mux wire for an open. Perform BODY VERIFICATION TEST - VER 1.	All
5	If there are no possible causes remaining, view repair. Repair Replace the Door Lock Switch - open resistor. Perform BODY VERIFICATION TEST - VER 1.	All
6	Turn the ignition off. Disconnect the Remote Keyless Entry Module connector. Disconnect the Door Lock Switch connector. Measure the voltage between the appropriate Door Switch Mux circuit and ground. Is there any voltage present? Yes → Repair the Door Switch Mux wire for a short to voltage. Perform BODY VERIFICATION TEST - VER 1. No → Replace the Remote Keyless Entry module. Perform BODY VERIFICATION TEST - VER 1.	All

Symptom:

***AUTOMATIC DOOR LOCKS INOPERATIVE**

POSSIBLE CAUSES
AUTO DOOR LOCKS NOT ENABLED
DOOR AJAR STATUS
PCM DTC'S PRESENT
RKE MODULE DEFECTIVE - AUTO LOCKS INOPERABLE

TEST	ACTION	APPLICABILITY
1	With the DRBIII select: "Theft Alarm" "VTSS" "Miscellaneous" "Auto Door Locks" Does the DRB show "Auto Door Locks: ENABLED"? Yes → Go To 2 No → With the DRBIII, enable the Auto Door Locks and retest the System. Perform BODY VERIFICATION TEST - VER 1.	All
2	Ensure all doors are closed. With the DRBIII read all DOOR AJAR states Do any door ajar states show CLOSED? Yes → Refer to symptom COURTESY LAMPS ON AT ALL TIMES in the INTERIOR LIGHTING category. Perform BODY VERIFICATION TEST - VER 1. No → Go To 3	All
3	With the DRBIII read "Engine" DTC's. Are there any TPS or Vehicle Speed DTC's present? Yes → Refer to symptom list for problems related to DRIVEABILITY.. Perform BODY VERIFICATION TEST - VER 1. No → Go To 4	All
4	If there are no possible causes remaining, view repair. Repair Replace the Remote Keyless Entry Module. Perform BODY VERIFICATION TEST - VER 1.	All

Symptom:

*DECKLID SOLENOID INOPERATIVE

POSSIBLE CAUSES
SOLENOID GROUND OPEN
DECKLID RELEASE SOLENOID OPEN
DECKLID RELEASE RELAY OUTPUT WIRE OPEN
RKE MODULE - DECKLID RELAY OPEN

TEST	ACTION	APPLICABILITY
1	Disconnect the Decklid Solenoid connector. Connect a test light between the Decklid Release Relay Output circuit and the Ground circuit in the Decklid Solenoid connector. With the DRBIII actuate the "Decklid Solenoid". Did the test light illuminate when the solenoid was actuated? Yes → Replace the Decklid Release Solenoid. Perform BODY VERIFICATION TEST - VER 1. No → Go To 2	All
2	Turn ignition off. Disconnect the Decklid Solenoid connector. Using a 12-volt test light connected to 12-volts, check the Ground circuit in the Decklid Release connector. Does the test light illuminate brightly? Yes → Go To 3 No → Repair the open ground wire. Perform BODY VERIFICATION TEST - VER 1.	All
3	Turn ignition off. Disconnect the Remote Keyless Entry module connector. Disconnect the Decklid Solenoid connector. Measure the resistance of the Decklid Release Relay Output wire from the RKE module connector to the Decklid Solenoid connector. Is the resistance below 5.0 ohms? Yes → Go To 4 No → Repair the open Decklid Release Relay Output wire. Perform BODY VERIFICATION TEST - VER 1.	All
4	If there are no possible causes remaining, view repair. Repair Replace the Remote Keyless Entry Module. Perform BODY VERIFICATION TEST - VER 1.	All

Symptom:

***DOORS LOCKABLE WITH KEY IN IGNITION & DRIVER DOOR OPEN**

POSSIBLE CAUSES
DRIVER DOOR AJAR SWITCH - OPEN
OPEN DRIVER DOOR AJAR SWITCH SENSE TO RKE MODULE
IGNITION SWITCH OPEN
KEY-IN IGNITION SWITCH SENSE WIRE OPEN
OPEN DRIVER DOOR AJAR SWITCH SENSE TO CLUSTER
INSTRUMENT CLUSTER - KEY-IN IGNITION OPEN
INSTRUMENT CLUSTER DEFECTIVE-DRIVER DOOR AJAR OPEN
RKE MODULE DEFECTIVE-OPEN DRIVER DOOR AJAR

TEST	ACTION	APPLICABILITY
1	Open the Drivers door. With the DRB III select: ″Body″ ″Electro/Mech Cluster″ ″Input/Output″ Read the ″Drv Door Ajar Sw″ state. Does the DRBIII Show: ″CLOSED″? No → Go To 2 Yes → Go To 5	All
2	Remove the driver door inner trim panel to gain access to the Door Lock Motor/Ajar Switch connector. Disconnect the Door Lock Motor/ Ajar Switch connector (Left Front or Right Front). Connect a jumper wire between Door Ajar Switch Sense circuit (driver door) and ground. With the DRB III select: ″Body″ ″Electro/Mech Cluster″ ″Input/Output″ Read the ″Drv Door Ajar Sw″ state. Does the DRBIII show: ″Closed″? Yes → Replace the Driver Door Ajar Switch. Perform BODY VERIFICATION TEST - VER 1. No → Go To 3	All
3	Turn ignition off. Disconnect the Door Lock Motor/Ajar Switch (driver door) connector. Disconnect the Instrument Cluster connector. Measure the resistance of the Door Ajar Switch Sense (driver door) circuit between the Door Lock Motor/Ajar Switch connector and the Instrument Cluster connector. Is the resistance below 5.0 ohms? Yes → Go To 4 No → Repair the Driver Door Ajar Switch Sense wire for an open. Perform BODY VERIFICATION TEST - VER 1.	All

*DOORS LOCKABLE WITH KEY IN IGNITION & DRIVER DOOR OPEN — Continued

TEST	ACTION	APPLICABILITY
4	If there are no possible causes remaining, view repair. Repair Replace the Instrument Cluster Perform BODY VERIFICATION TEST - VER 1.	All
5	**Note: Ensure that the Key is still in the Ignition Switch.** With the DRB, read the Key-In Ignition status. Does the DRB show KEY-IN IGN: CLOSED ? No → Go To 6 Yes → Go To 9	All
6	Ensure the Instrument Cluster is connected before proceeding. Disconnect the Ignition Switch connector. Connect a jumper wire from the Key-In Ignition Switch Sense circuit in the ignition switch connector to ground. With the DRB, read the Key-In Ignition status. Does the DRB show KEY-IN IGN: CLOSED ? Yes → Replace the Ignition Switch. Perform BODY VERIFICATION TEST - VER 1. No → Go To 7	All
7	Disconnect the Ignition Switch connector. Disconnect the Instrument Cluster connector. Measure the resistance of the Key-In Ignition Switch Sense circuit between the ignition switch connector and the instrument cluster connector. Is the resistance below 5.0 ohms? Yes → Go To 8 No → Repair the open Key-In Ignition Switch Sense wire. Perform BODY VERIFICATION TEST - VER 1.	All
8	If there are no possible causes remaining, view repair. Repair Replace the Instrument Cluster (key-in ign open). Perform BODY VERIFICATION TEST - VER 1.	All
9	Turn ignition off. Remove the driver door inner trim panel. Disconnect the Driver Door Lock Motor/Ajar Switch connector. Disconnect the RKE Module connector. Measure the resistance of the Driver Door Ajar Switch Sense circuit between the Driver Door Lock Motor/Ajar Switch connector and the RKE module connector. Is the resistance below 5.0 ohms? Yes → Go To 10 No → Repair the open Driver Door Ajar Switch Sense wire. Perform BODY VERIFICATION TEST - VER 1.	All
10	If there are no possible causes remaining, view repair. Repair Replace the Remote Keyless Entry Module. Perform BODY VERIFICATION TEST - VER 1.	All

Symptom:

*DRIVER DOOR FAILS TO LOCK & UNLOCK

POSSIBLE CAUSES
RKE MODULE - OPEN DRIVER UNLOCK CIRCUIT
DRIVER DOOR LOCK MOTOR - OPEN
DRIVER DOOR LOCK RELAY OUTPUT WIRE OPEN
DRIVER DOOR UNLOCK RELAY OUTPUT WIRE OPEN

TEST	ACTION	APPLICABILITY
1	Disconnect the Remote Keyless Entry module connector. Lower the driver door window. Connect a jumper wire between the Door Lock Relay Output ckt and the Ground ckt in the RKE module connector. Connect a jumper wire to the Driver Door Unlock Relay Output ckt and momentarily touch it to the Fused B(+) ckt and observe the door lock. Reverse the jumper wires to drive the motor in the opposite direction. Did the drivers door Lock and Unlock? Yes → Replace the Remote Keyless Entry Module. Perform BODY VERIFICATION TEST - VER 1. No → Go To 2	All
2	Ensure the RKE module is connected before proceeding. Remove the inner door trim panel to gain access to the Door Lock Motor connector. Disconnect the Door Lock Motor connector. Connect a test light between the Door Lock Relay Output and the Driver Door Unlock Relay Output circuits in the door lock motor connector. Press the door lock switch to the Lock and Unlock positions. Did the test light illuminate when the lock switch was pressed in both directions? Yes → Replace the Driver Door Lock Motor. Perform BODY VERIFICATION TEST - VER 1. No → Go To 3	All
3	Remove the inner door trim panel to gain access to the Door Lock Motor connector. Disconnect the Door Lock Motor connector. Disconnect the Remote Keyless Entry module connector. Measure the resistance of the Door Lock Relay Output wire between the RKE connector and the door lock motor connector. Is the resistance below 5.0 ohms? Yes → Go To 4 No → Repair the Driver Door Lock Relay Output Wire for an open. Perform BODY VERIFICATION TEST - VER 1.	All

*DRIVER DOOR FAILS TO LOCK & UNLOCK — Continued

TEST	ACTION	APPLICABILITY
4	Remove the inner door trim panel to gain access to the Door Lock Motor connector. Disconnect the Door Lock Motor connector. Disconnect the Remote Keyless Entry module connector. Measure the resistance of the Driver Door Unlock Relay Output wire between the RKE connector and the door lock motor connector. Is the resistance below 5.0 ohms? Yes → Test Complete. No → Repair the open Driver Door Unlock Relay Output wire. Perform BODY VERIFICATION TEST - VER 1.	All

Symptom:

***DRIVER DOOR FAILS TO UNLOCK**

POSSIBLE CAUSES
DRIVER DOOR UNLOCK RELAY OUTPUT WIRE SHORT TO GROUND
RKE MODULE DEFECTIVE - DRIVER UNLOCK OPEN

TEST	ACTION	APPLICABILITY
1	Turn ignition off. Disconnect the Remote Keyless Entry module connector. Measure the resistance of the Driver Door Unlock Relay Output circuit in the RKE module connector to body ground. Is the resistance below 1000.0 ohms? Yes → Repair the Driver Door Unlock Relay Output wire for a short to ground. Perform BODY VERIFICATION TEST - VER 1. No → Replace the Remote Keyless Entry Module. Perform BODY VERIFICATION TEST - VER 1.	All

Symptom:

*ONE PASSENGER DOOR FAILS TO LOCK & UNLOCK

POSSIBLE CAUSES
DOOR LOCK MOTOR - OPEN
DOOR UNLOCK RELAY OUTPUT WIRE OPEN
DOOR LOCK RELAY OUTPUT WIRE OPEN
DOOR UNLOCK RELAY OUTPUT WIRE SHORT TO GROUND
DOOR UNLOCK RELAY OUTPUT SHORT TO DOOR LOCK RELAY OUTPUT
DOOR LOCK RELAY OUTPUT WIRE SHORT TO GROUND

TEST	ACTION	APPLICABILITY
1	Remove the inner door trim panel to gain access to the Door Lock Motor connector. Disconnect the appropriate Door Lock Motor connector. Connect a test light between the Door Lock Relay Output and the Door Unlock Relay Output circuits in the door lock motor connector. Press the door lock switch to the Lock and Unlock positions. Did the test light illuminate when the lock switch was pressed in both directions? Yes → Replace the Door Lock Motor. Perform BODY VERIFICATION TEST - VER 1. No → Go To 2	All
2	Turn ignition off. Remove the appropriate inner door trim panel to gain access to the Door Lock Motor connector. Disconnect the Door Lock Motor connector. Disconnect the Remote Keyless Entry module connector. Measure the resistance of the Door Lock Relay Output wire between the RKE module connector and the door lock motor connector. Is the resistance below 5.0 ohms? Yes → Go To 3 No → Repair the Door Lock Relay Output wire for an open. Perform BODY VERIFICATION TEST - VER 1.	All
3	Turn ignition off. Remove the appropriate inner door trim panel to gain access to the Door Lock Motor connector. Disconnect the Door Lock Motor connector. Disconnect the Remote Keyless Entry module connector. Measure the resistance of the Door Unlock Relay Output wire between the RKE module connector and the door lock motor connector. Is the resistance below 5.0 ohms? Yes → Go To 4 No → Repair the Door Unlock Relay Output wire for an open. Perform BODY VERIFICATION TEST - VER 1.	All

*ONE PASSENGER DOOR FAILS TO LOCK & UNLOCK — Continued

TEST	ACTION	APPLICABILITY
4	Turn ignition off. Remove the appropriate inner door trim panel to gain access to the Door Lock Motor connector. Disconnect the Door Lock Motor connector. Disconnect the Remote Keyless Entry module connector. Measure the resistance of the Door Unlock Relay Output wire to ground. Is the resistance below 1000.0 ohms? Yes → Repair the Door Unlock Relay Output wire for a short to ground. Perform BODY VERIFICATION TEST - VER 1. No → Go To 5	All
5	Turn ignition off. Remove the appropriate inner door trim panel to gain access to the Door Lock Motor connector. Disconnect the Door Lock Motor connector. Disconnect the Remote Keyless Entry module connector. Measure the resistance between the Door Unlock Relay Output circuit and the Door Lock Relay Output circuit Is the resistance below 1000.0 ohms? Yes → Repair the Door Unlock Relay Output wire for a short to the Door Lock Relay Output wire. Perform BODY VERIFICATION TEST - VER 1. No → Go To 6	All
6	Turn ignition off. Remove the appropriate inner door trim panel to gain access to the Door Lock Motor connector. Disconnect the Door Lock Motor connector. Disconnect the Remote Keyless Entry module connector. Measure the resistance of the Door Lock Relay Output wire to ground. Is the resistance below 1000.0 ohms? Yes → Repair the Door Lock Relay Output wire for a short to ground. Perform BODY VERIFICATION TEST - VER 1. No → Test Complete.	All

Symptom:
***RKE INOPERATIVE**

POSSIBLE CAUSES
TEST TRANSMITTER WITH TESTER
RKE TRANSMITTER NOT PROGRAMMED
TEST RKE TRANSMITTER
RKE TRANSMITTER - INOPERATIVE
RKE MODULE
RKE MODULE - RECEIVER INOPERABLE

TEST	ACTION	APPLICABILITY
1	**NOTE: Ensure the RKE module is configured for RKE and the M1 (IOD) fuse is installed.** **Note: Ensure the voltage of each battery is greater than 3.0 volts before proceeding.** Do you have access to the Miller Tool ″9001 RF DETECTOR″? ? Yes → Go To 2 No → Go To 4	All
2	Using the 9001 RF Detector, follow the instructions on the back of the tester and test the transmitter several times. Does the signal strength measure ″STRONG″? Yes → Go To 3 No → Replace the transmitter. Perform BODY VERIFICATION TEST - VER 1.	All
3	Turn the ignition on Place transmission in the Park position. Ensure Vehicle Theft Security System (if equipped) is in Disarm Mode. With the DRBIII®, select Theft Alarm, VTSS, MISCELLANEOUS, then PROGRAM RKE. Follow the instructions on the screen. Exit PROGRAM RKE. Activate the Door Locks using the RKE Transmitter. Did the door locks respond properly to the RKE transmitter commands? Yes → Repair complete. Perform BODY VERIFICATION TEST - VER 1. No → Replace the Remote Keyless Entry Module and reprogram all transmitters used with this vehicle. Perform BODY VERIFICATION TEST - VER 1.	All

*RKE INOPERATIVE — Continued

TEST	ACTION	APPLICABILITY
4	Using the DRBIII select Theft Alarm, VTSS, MISCELLANEOUS then RKE FOB & Module Test. Follow the instructions on the DRBIII screen. Try the Door Locks using the original Transmitter. Did the Door Locks respond properly to the Transmitter commands ? Yes → Using the DRBIII, program the transmitter and recheck the system. If okay, program all Transmitters that will be used with this vehicle. Perform BODY VERIFICATION TEST - VER 1. No → Go To 5	All
5	Secure a known good Transmitter from another PL or PT vehicle. Using the DRBIII select BODY, Theft Alarm, VTSS, MISCELLANEOUS then RKE FOB & Module Test. Follow the instructions on the DRBIII screen. Try the Door Locks using the Transmitter. Did the Door Locks respond properly to the Transmitter commands ? Yes → Replace the original Transmitter. Program all Transmitters that will be used with this Vehicle. Perform BODY VERIFICATION TEST - VER 1. No → Replace the Remote Keyless Entry Module. Perform BODY VERIFICATION TEST - VER 1.	All

Symptom:
HOOD AJAR SWITCH MISSING (EXPORT ONLY)

When Monitored and Set Condition:

HOOD AJAR SWITCH MISSING (EXPORT ONLY)

When Monitored: With the ignition on during configuration of the Remote Keyless Entry Module.

Set Condition: If the Hood Ajar Switch RKE Module input is NOT grounded while the module is being configured for VTSS, this code will set.

POSSIBLE CAUSES
MODULE CONFIGURATION TEST
HOOD AJAR SWITCH OPERATIONAL TEST
OPEN GROUND CIRCUIT
HOOD AJAR SWITCH SENSE CIRCUIT OPEN
HOOD AJAR SWITCH
RKE MODULE - HOOD AJAR

TEST	ACTION	APPLICABILITY
1	Was the hood open during module configuration? Yes → Go To 2 No → Open the hood and attempt to reconfigure the RKE module.	All
2	Open the hood. With the DRBIII® select: VEHICLE THEFT, VTSS, INPUT/OUTPUT. Read the HOOD AJAR SW state. Does the DRBIII® show CLOSED? Yes → Replace the Remote Keyless Entry Module. Perform VTSS VERIFICATION TEST - 1A. No → Go To 3	All
3	Disconnect the Hood Ajar Switch connector. Measure the resistance of the Ground circuit in the Hood Ajar connector. Is the resistance below 5.0 ohms? Yes → Go To 4 No → Repair the Ground circuit for an open. Perform VTSS VERIFICATION TEST - 1A.	All

HOOD AJAR SWITCH MISSING (EXPORT ONLY) — Continued

TEST	ACTION	APPLICABILITY
4	Disconnect the Hood Ajar Switch connector. Disconnect the Remote Keyless Entry Module connector. Measure the resistance of the Hood Ajar Switch Sense circuit between the switch connector and the RKE module connector. Is the resistance below 5.0 ohms? Yes → Go To 5 No → Repair the Hood Ajar Switch Sense circuit for an open. Perform VTSS VERIFICATION TEST - 1A.	All
5	Disconnect the Hood Ajar Switch connector. Connect a jumper wire between the Hood Ajar Switch Sense circuit and ground. Does the DRBIII® show Hood Ajar Sw: Closed? Yes → Replace the Hood Ajar Switch. Perform VTSS VERIFICATION TEST - 1A. No → Replace the Remote Keyless Entry Module. Perform VTSS VERIFICATION TEST - 1A.	All

Symptom:
MODULE PREVIOUSLY CONFIGURED FOR VTSS

When Monitored and Set Condition:

MODULE PREVIOUSLY CONFIGURED FOR VTSS

When Monitored: With the ignition on during the configuration of the Remote Keyless Entry Module.

Set Condition: If the configuration of the module type has been previously set for VTSS, an attempt to set the module for non-VTSS will cause the new configuration to fail. This code should only appear if attempting to re-configure a used RKE module.

POSSIBLE CAUSES
REMOTE KEYLESS ENTRY MODULE

TEST	ACTION	APPLICABILITY
1	The RKE module attempting to be configured to non-VTSS, has originally been configured to be used on a VTSS equipped vehicle. If the vehicle is NOT VTSS equipped (does not have either a hood ajar or a decklid security switch (knockout)) the RKE module attempting to be configured should be replaced. If there are no possible causes remaining, view repair. Repair Replace the Remote Keyless Entry Module. Perform VTSS VERIFICATION TEST - 1A.	All

Symptom:

***ALARM TRIPS ON ITS OWN**

POSSIBLE CAUSES
LAST VTSS CAUSE
ATTEMPT TO TRIP ALARM
INTERMITTENT CONDITION

TEST	ACTION	APPLICABILITY
1	With the DRBIII® in Theft Alarm Monitor Display, read the Alarm Tripped By state. Were there any causes displayed? Yes → Check for a possible intermittent condition with the circuit indicated by the DRBIII®. Perform VTSS VERIFICATION TEST - 1A. No → Go To 2	All
2	Is this an export vehicle equipped with a hood ajar switch? Yes → Go To 3 No → Go To 4	All
3	Remove the ignition key (but keep in hand). Lock the vehicle and close all the doors and hood. Allow the VTSS to arm. Lightly tap on hood near ajar switch to simulate wind and noise vibration. Did the VTSS trip to the alarming state? Yes → Replace the hood ajar switch. Perform VTSS VERIFICATION TEST - 1A. No → Go To 4	All
4	**NOTE: The condition that caused the alarm is not present at this time. The following list may help in indentifying the intermittent condition.** Refer to any Technical Service Bulletins (TSB) that may apply. Visually inspect related wiring harnesses. Look for chafed, pierced, pinched, or partially broken wires. Visually inspect the related wiring harness connectors. Look for loose connections, broken, bent, pushed out, or corroded terminals. Were any of the above conditions present? Yes → Repair as necessary. Perform VTSS VERIFICATION TEST - 1A. No → Test Complete.	All

Symptom:

*HEADLAMPS FAIL TO FLASH DURING ALARM

POSSIBLE CAUSES
DIMMER SWITCH LOW BEAM OUTPUT CIRCUIT OPEN
REMOTE KEYLESS ENTRY MODULE

TEST	ACTION	APPLICABILITY
1	Ensure the Low Beam Headlamps are operational before proceeding. If the lamps are not working properly, refer to symptom LOW BEAM HEADLAMPS WILL NOT TURN ON in the EXTERIOR LIGHTING category. Disconnect the Remote Keyless Entry module connector. Connect a test light from the Dimmer Switch Low Beam Output circuit to ground. Turn the Low Beam Headlamps on. Does the test light illuminate when the low beam headlamps are on? Yes → Replace the Remote Keyless Entry Module. Perform VTSS VERIFICATION TEST - 1A. No → Repair the Dimmer Switch Low Beam Output circuit for an open. Perform VTSS VERIFICATION TEST - 1A.	All

Symptom:

***HORN FAILS TO SOUND DURING ALARM**

POSSIBLE CAUSES
HORN RELAY CONTROL CIRCUIT OPEN
REMOTE KEYLESS ENTRY MODULE

TEST	ACTION	APPLICABILITY
1	Ensure the horn is operational from the horn switch before proceeding. If the horn does not work properly, refer to the appropriate Service Information and repair the Horn circuit as necessary. Disconnect the Remote Keyless Entry module connector. Connect one end of a jumper wire to the Horn Relay Control circuit in the RKE connector. Momentarily touch the other end of the jumper wire to ground. Did the horn sound when the jumper wire was attached? Yes → Replace the Remote Keyless Entry Module. Perform VTSS VERIFICATION TEST - 1A. No → Repair the Horn Relay Control circuit for an open. Perform VTSS VERIFICATION TEST - 1A.	All

Symptom:

*INTRUSION SENSOR CANNOT BE DISABLED (EXPORT ONLY)

POSSIBLE CAUSES
INTRUSION SENSOR
REMOTE KEYLESS ENTRY MODULE

TEST	ACTION	APPLICABILITY
1	Disconnect the Dome Lamp/Intrusion Sensor connector. Measure the voltage between the Intrusion Sensor Signal circuit and ground. Is the voltage above 10.0 volts? Yes → Replace the Intrusion Sensor. Perform VTSS VERIFICATION TEST - 1A. No → Replace the Remote Keyless Entry Module in accordance with the Service Information. Perform VTSS VERIFICATION TEST - 1A.	All

Symptom:

***INTRUSION SENSOR FAILS TO TRIP VTSS (EXPORT ONLY)**

POSSIBLE CAUSES
INTRUSION SENSOR
OPEN FUSED B(+) CIRCUIT
OPEN GROUND CIRCUIT
INTRUSION SENSOR SIGNAL CIRCUIT OPEN
INTRUSION SENSOR SIGNAL CIRCUIT SHORTED TO GROUND
INTRUSION SENSOR
REMOTE KEYLESS ENTRY MODULE

TEST	ACTION	APPLICABILITY
1	Ensure the IOD fuse is installed. Using the DRBIII®, read the module configuration and ensure it is configured for PREMIUM VTA. With the DRBIII® select: THEFT ALARM, VTSS, SYSTEM TEST and INTRUSION SENSOR TEST. While waving your hand around the Intrusion Sensor, read the DRBIII®. Does the DRBIII® display INTRUSION DETECTED? Yes → Verify the system has not been armed with the intrusion sensor disabled. Replace the Intrusion Sensor if the problem remains intermittent. Perform VTSS VERIFICATION TEST - 1A. No → Go To 2	All
2	Disconnect the Dome Lamp/Intrusion Sensor connector. Measure the voltage between the Fused B(+) circuit and ground. Is the voltage above 10.0 volts? Yes → Go To 3 No → Repair the Fused B(+) circuit for an open between the IOD fuse and the Intrusion Sensor. Perform VTSS VERIFICATION TEST - 1A.	All
3	Disconnect the Dome Lamp/Intrusion Sensor connector. Turn the ignition and all the lights off. Measure the resistance between ground and the Ground circuit. Is the resistance below 5.0 ohms? Yes → Go To 4 No → Repair the Ground circuit for an open. Perform VTSS VERIFICATION TEST - 1A.	All

*INTRUSION SENSOR FAILS TO TRIP VTSS (EXPORT ONLY) — Continued

TEST	ACTION	APPLICABILITY
4	Disconnect the Dome Lamp/Intrusion Sensor connector. Disconnect the Remote Keyless Entry Module connector. Measure the resistance of the Intrusion Sensor Signal circuit between the sensor connector and the RKE module connector. Is the resistance below 5.0 ohms? Yes → Go To 5 No → Repair the Intrusion Sensor Signal circuit for an open. Perform VTSS VERIFICATION TEST - 1A.	All
5	Turn the ignition and all the lights off. Disconnect the Dome Lamp/Intrusion Sensor connector. Disconnect the Remote Keyless Entry Module Connector. Measure the resistance of the Intrusion Sensor Signal circuit to ground. Is the resistance below 1000.0 ohms? Yes → Repair the Intrusion Sensor Signal circuit for a short to ground. Perform VTSS VERIFICATION TEST - 1A. No → Go To 6	All
6	Disconnect the Dome Lamp/Intrusion Sensor connector. Backprobe a voltmeter lead to the Intrusion Sensor Signal circuit in the sensor connector and the other lead to ground. Reconnect the Intrusion Sensor Signal connector. Wave your hand around the Intrusion Sensor and observe the voltmeter. Is the voltage between 3.0 and 6.0 volts? Yes → Replace the Remote Keyless Entry Module in accordance with the Service Information. Perform VTSS VERIFICATION TEST - 1A. No → Replace the Intrusion Sensor in accordance with the Service Information. Perform VTSS VERIFICATION TEST - 1A.	All

Symptom:

***INTRUSION SENSOR REPEATEDLY TRIGGERS VTSS (EXPORT ONLY)**

POSSIBLE CAUSES
INTRUSION SENSOR
REMOTE KEYLESS ENTRY MODULE

TEST	ACTION	APPLICABILITY
1	**NOTE: Ensure there are no hanging objects or loose seat belts causing the false triggering. Also, ensure there is no dust or debris around the intrusion sensor causing the false triggering.** Disconnect the Dome Lamp/Intrusion Sensor connector. Close all the doors and arm the VTSS. Does the alarm inadvertently trigger due to intrusion sense even though the sensor is disconnected? Yes → Replace the Remote Keyless Entry Module in accordance with the Service Information. Perform VTSS VERIFICATION TEST - 1A. No → Replace the Intrusion Sensor in accordance with the Service Information. Perform VTSS VERIFICATION TEST - 1A.	All

Symptom:

*OPEN DRIVER DOOR FAILS TO TRIP ALARM

POSSIBLE CAUSES
DRIVER DOOR AJAR SWITCH
DRIVER DOOR AJAR SWITCH GROUND CIRCUIT OPEN
DRIVER DOOR AJAR SWITCH SENSE CIRCUIT OPEN
REMOTE KEYLESS ENTRY MODULE

TEST	ACTION	APPLICABILITY
1	Disconnect the Driver Door Ajar switch connector. Using a 12-volt Test Light connected to 12-volts, test the Ground circuit for continuity. Does the light illuminate? Yes → Go To 2 No → Repair the Driver Door Ajar Switch Ground circuit for an open. Perform BODY VERIFICATION TEST - VER 1.	All
2	Disconnect the Driver Door Lock Motor/Ajar Switch connector. Connect a jumper wire between the Door Ajar Switch Sense circuit and ground. With the DRBIII® select: THEFT ALARM, VTSS, INPUT/OUTPUT. With the DRBIII®, read the DRV DOOR AJAR SW state. Does the DRBIII® show: CLOSED? Yes → Replace the Driver Door Lock Motor/Ajar Switch. Perform VTSS VERIFICATION TEST - 1A. No → Go To 3	All
3	Turn the ignition off. Disconnect the Driver Door Lock Motor/Ajar Switch connector. Disconnect the RKE Module connector. Measure the resistance of the Door Ajar Switch Sense circuit between the door ajar switch connector and the RKE module connector. Is the resistance below 5.0 ohms? Yes → Replace the Remote Keyless Entry Module. Perform VTSS VERIFICATION TEST - 1A. No → Repair the Door Ajar Switch Sense circuit for an open. Perform VTSS VERIFICATION TEST - 1A.	All

Symptom:

*OPEN PASSENGER DOOR FAILS TO TRIP ALARM

POSSIBLE CAUSES
LEFT REAR DOOR AJAR SWITCH GROUND CIRCUIT OPEN
PASSENGER DOOR AJAR SWITCH
PASSENGER DOOR AJAR SWITCH GROUND CIRCUIT OPEN
RIGHT REAR DOOR AJAR SWITCH GROUND CIRCUIT OPEN
PASSENGER DOOR AJAR/RKE SENSE CIRCUIT OPEN
LEFT REAR DOOR AJAR SWITCH
PASSENGER DOOR AJAR/RKE SENSE CIRCUIT OPEN
RIGHT REAR DOOR AJAR SWITCH
PASSENGER DOOR AJAR/RKE CIRCUIT OPEN
PASSENGER DOOR AJAR/RKE SENSE CIRCUIT OPEN
REMOTE KEYLESS ENTRY MODULE
RKE MODULE - PASSENGER DOOR AJAR SENSE

TEST	ACTION	APPLICABILITY
1	Close all passenger doors. With the DRBIII® select: THEFT ALARM, VTSS, INPUT/OUTPUT. Read the PASS DOOR AJAR SW state and open and close each passenger door. Select the door(s) that did not show CLOSED when that door was opened. Passenger Go To 2 Left Rear Go To 4 Right Rear Go To 6 All Passenger Doors Go To 8 All Door States Read Correctly Retest the VTSS system. If the passenger doors will still not trip the alarm, replace the Remote Keyless Entry Module. Perform VTSS VERIFICATION TEST - 1A.	All
2	Disconnect the Passenger Door Ajar switch connector. Using a 12-volt Test Light connected to 12-volts, test the Ground circuit for continuity. Does the light illuminate? Yes → Go To 3 No → Repair the Passenger Door Ajar Switch Ground circuit for an open. Perform VTSS VERIFICATION TEST - 1A.	All

*OPEN PASSENGER DOOR FAILS TO TRIP ALARM — Continued

TEST	ACTION	APPLICABILITY
3	Open the Passenger Door. Disconnect the Passenger Door Lock Motor/Ajar Switch connector. Close all the other passenger doors. Connect a jumper wire from the Passenger Door Ajar/RKE Sense circuit to ground. With the DRBIII® select: THEFT ALARM, VTSS, INPUT/OUTPUT. With the DRBIII®, read the PASS DOOR AJAR SW state. Does the DRBIII® show: CLOSED? Yes → Replace the Passenger Door Lock Motor/Ajar Switch. Perform VTSS VERIFICATION TEST - 1A. No → Repair the Door Ajar Switch Sense circuit for an open between the door ajar switch and the splice. Perform VTSS VERIFICATION TEST - 1A.	All
4	Disconnect the Passenger Door Ajar switch connector. Using a 12-volt Test Light connected to 12-volts, test the Ground circuit for continuity. Does the light illuminate? Yes → Go To 5 No → Repair the Left Rear Door Ajar Switch Ground circuit for an open. Perform VTSS VERIFICATION TEST - 1A.	All
5	Open the Left Rear Door. Disconnect the Left Rear Door Ajar Switch connector. Close all the other Passenger Doors. Connect a jumper wire from the Passenger Door Ajar/RKE Sense circuit to ground. With the DRBIII® select: THEFT ALARM, VTSS, INPUT/OUTPUT. With the DRBIII®, read the PASS DOOR AJAR SW state. Does the DRBIII® show: CLOSED? Yes → Replace the Left Rear Door Ajar Switch. Perform VTSS VERIFICATION TEST - 1A. No → Repair the Door Ajar Switch Sense circuit for an open between the door ajar switch and the splice. Perform VTSS VERIFICATION TEST - 1A.	All
6	Disconnect the Driver Door Ajar switch connector. Using a 12-volt Test Light connected to 12-volts, test the Ground circuit for continuity. Does the light illuminate? Yes → Go To 7 No → Repair the Right Rear Door Ajar Switch Ground circuit for an open. Perform VTSS VERIFICATION TEST - 1A.	All

*OPEN PASSENGER DOOR FAILS TO TRIP ALARM — Continued

TEST	ACTION	APPLICABILITY
7	Open the Right Rear Door. Disconnect the Driver Door Ajar Switch connector. Close all the other Passenger Doors. Connect a jumper wire from the Passenger Door Ajar/RKE Sense circuit to ground. With the DRBIII® select: THEFT ALARM, VTSS, INPUT/OUTPUT. With the DRBIII®, read the PASS DOOR AJAR SW state. Does the DRBIII® show: CLOSED? Yes → Replace the Right Rear Door Ajar Switch. Perform VTSS VERIFICATION TEST - 1A. No → Repair the Door Ajar Switch Sense circuit for an open between the door ajar switch and the splice. Perform VTSS VERIFICATION TEST - 1A.	All
8	Turn the ignition off. Disconnect the Passenger Door Ajar Switch connector. Disconnect the RKE Module connector. Measure the resistance of the Passenger Door Ajar/RKE Sense circuit between the door ajar switch connector and the RKE module connector. Is the resistance below 5.0 ohms? Yes → Replace the Remote Keyless Entry Module. Perform VTSS VERIFICATION TEST - 1A. No → Repair the Passenger Door Ajar/RKE Sense circuit for an open. Perform VTSS VERIFICATION TEST - 1A.	All

Symptom:

*PARK LAMPS FAIL TO FLASH DURING ALARM

POSSIBLE CAUSES
PARK LAMP SWITCH OUTPUT CIRCUIT OPEN
REMOTE KEYLESS ENTRY MODULE

TEST	ACTION	APPLICABILITY
1	Ensure the park lamps are operational from the multifunction switch. If the park lamps are inoperative, refer to the appropriate Service Information and repair the Park Lamp circuit as necessary. Disconnect the Remote Keyless Entry Module connector. Connect a test light to the Park Lamp Switch Output circuit (cav 2) to ground. Turn the Park Lamps on. Does the test light illuminate when the Park Lamps are on? Yes → Replace the Remote Keyless Entry Module. Perform VTSS VERIFICATION TEST - 1A. No → Repair the Park Lamp Switch Output circuit for an open. Perform VTSS VERIFICATION TEST - 1A.	All

Symptom List:

***VTSS FAILS TO ARM FROM DRIVER DOOR CYLINDER LOCK SWITCH (EXPORT ONLY)**

***VTSS FAILS TO ARM/DISARM FROM DRIVER DOOR CYLINDER LOCK SWITCH**

Test Note: All symptoms listed above are diagnosed using the same tests. The title for the tests will be *VTSS FAILS TO ARM FROM DRIVER DOOR CYLINDER LOCK SWITCH (EXPORT ONLY).

POSSIBLE CAUSES
DOOR LOCK OPERATION TEST
GROUND CIRCUIT OPEN
DRIVER DOOR SWITCH MUX CIRCUIT OPEN
DRIVER CYLINDER LOCK SWITCH FAULTY

TEST	ACTION	APPLICABILITY
1	Open the driver door and operate the door locks from the door lock switch. Did the door locks operate properly? Yes → Go To 2 No → Refer to symptom: *ALL LOCKS INOPERATIVE FROM DRIVER DOOR LOCK SWITCH in the POWER DOOR LOCKS/RKE category.	All
2	Disconnect the Cylinder Lock Switch connector. Measure the resistance of the ground circuit to body ground. Is the resistance below 5.0 ohms? Yes → Go To 3 No → Repair the ground circuit for an open. Perform VTSS VERIFICATION TEST - 1A.	All
3	Disconnect the Cylinder Lock Switch connector. Measure the voltage between the Driver Door Switch Mux circuit and ground. Is the voltage approximately 5.0 volts? Yes → Replace the Driver Cylinder Lock Switch. Perform VTSS VERIFICATION TEST - 1A. No → Repair the Driver Door Switch Mux circuit for an open. Perform VTSS VERIFICATION TEST - 1A.	All

Symptom:

***VTSS FAILS TO ARM FROM PASSENGER DOOR CYLINDER LOCK SWITCH (EXPORT ONLY)**

POSSIBLE CAUSES
DOOR LOCK OPERATION TEST
GROUND CIRCUIT OPEN
PASSENGER DOOR SWITCH MUX CIRCUIT OPEN
PASSENGER CYLINDER LOCK SWITCH FAULTY

TEST	ACTION	APPLICABILITY
1	Open the passenger door and operate the door locks from the door lock switch. Did the door locks operate properly? Yes → Go To 2 No → Refer to symptom: *ALL LOCKS INOPERATIVE FROM PASSENGER DOOR LOCK SWITCH in the POWER DOOR LOCKS/RKE category.	All
2	Disconnect the Cylinder Lock Switch connector. Measure the resistance of the ground circuit to body ground. Is the resistance below 5.0 ohms? Yes → Go To 3 No → Repair the ground circuit for an open. Perform VTSS VERIFICATION TEST - 1A.	All
3	Disconnect the Cylinder Lock Switch connector. Measure the voltage between the Passenger Door Switch Mux circuit and ground. Is the voltage approximately 5.0 volts? Yes → Replace the Passenger Cylinder Lock Switch. Perform VTSS VERIFICATION TEST - 1A. No → Repair the Passenger Door Switch Mux circuit for an open. Perform VTSS VERIFICATION TEST - 1A.	All

Symptom:

***VTSS INDICATOR FAILS TO FLASH**

POSSIBLE CAUSES
REMOTE KEYLESS ENTRY MODULE
INSTRUMENT CLUSTER
VTSS INDICATOR DRIVER CIRCUIT OPEN
VTSS LED OPEN

TEST	ACTION	APPLICABILITY
1	**NOTE: The VTSS must be enabled for the Indicator Lamp to operate. To help ensure an accurate diagnosis, verify the system is enabled before proceeding.** Disconnect the Remote Keyless Entry Module connector. Connect a jumper wire between the VTSS Indicator Driver circuit and ground. Does the VTSS Indicator illuminate? Yes → Replace the Remote Keyless Entry Module. Perform VTSS VERIFICATION TEST - 1A. No → Go To 2	All
2	Disconnect the Remote Keyless Entry Module connector. Disconnect the Instrument Cluster connector. Measure the resistance of the VTSS Indicator Driver circuit between the RKE module connector and the Instrument Cluster connector. Is the resistance below 5.0 ohms? Yes → Go To 3 No → Repair the VTSS Indicator Driver circuit for an open. Perform VTSS VERIFICATION TEST - 1A.	All
3	Remove the VTSS Indicator LED from the Instrument Cluster. Test the VTSS Indicator LED for functionality. Does the VTSS Indicator LED light? Yes → Replace the Instrument Cluster. Perform VTSS VERIFICATION TEST - 1A. No → Replace the VTSS LED. Perform VTSS VERIFICATION TEST - 1A.	All

Symptom:

*VTSS INDICATOR STAYS ON STEADY DURING ARMING

POSSIBLE CAUSES
DECKLID SECURITY SWITCH SENSE CIRCUIT OPEN (IF EQUIPPED)
DECKLID SECURITY SWITCH GROUND CIRCUIT OPEN (IF EQUIPPED)
DECKLID SECURITY SWITCH (IF EQUIPPED)
HOOD AJAR SWITCH SENSE CIRCUIT SHORTED TO GROUND (IF EQUIPPED)
HOOD AJAR SWITCH (IF EQUIPPED)
RKE MODULE - VTSS INDICATOR
RKE MODULE - HOOD AJAR (IF EQUIPPED)
RKE MODULE - DECKLID SECURITY (IF EQUIPPED)

TEST	ACTION	APPLICABILITY
1	Is this vehicle equipped with a hood ajar switch? Yes → Go To 2 No → Go To 4	All
2	Ensure the hood is closed and aligned properly. With the DRBIII®, read the Hood Ajar status. Does the DRBIII® show OPEN? Yes → Go To 4 No → Go To 3	All
3	Disconnect the Hood Ajar switch connector. Disconnect the Remote Keyless Entry Module connector. Measure the resistance of the Hood Ajar Switch Sense circuit to ground. Is the resistance below 1000.0 (1k) ohms? Yes → Repair the Hood Ajar Switch Sense circuit for a short to ground. Perform VTSS VERIFICATION TEST - 1A. No → Replace the Hood Ajar Switch. Perform VTSS VERIFICATION TEST - 1A.	All
4	Is this vehicle equipped with a Decklid Security switch? Yes → Go To 5 No → Replace the Remote Keyless Entry Module. Perform VTSS VERIFICATION TEST - 1A.	All
5	With the DRBIII®, read the VTSS Decklid Security Switch state. Does the DRBIII® show PRESENT? Yes → Replace the Remote Keyless Entry Module. Perform VTSS VERIFICATION TEST - 1A. No → Go To 6	All

*VTSS INDICATOR STAYS ON STEADY DURING ARMING — Continued

TEST	ACTION	APPLICABILITY
6	Disconnect the Remote Keyless Entry Module connector. Measure the resistance of the Decklid Security Switch Sense circuit to ground. Is the resistance below 10.0 ohms? Yes → Replace the Remote Keyless Entry Module. Perform VTSS VERIFICATION TEST - 1A. No → Go To 7	All
7	Disconnect the Decklid Security Switch connector (behind decklid lock cylinder). Using a 12-volt Test Light connected to 12-volts, test the Ground circuit for continuity. Does the light illuminate? Yes → Go To 8 No → Repair the Decklid Security Switch Ground circuit for an open. Perform VTSS VERIFICATION TEST - 1A.	All
8	Turn the ignition off. Disconnect the Remote Keyless Entry Module connector. Disconnect the Decklid Security Switch connector (behind decklid lock cylinder). Connect a jumper wire between the Decklid Security Switch Sense circuit and ground. Measure the resistance of the Decklid Security Switch Sense circuit in the RKE module connector. Is the resistance below 5.0 ohms? Yes → Replace the Decklid Security Switch. Perform VTSS VERIFICATION TEST - 1A. No → Repair the Decklid Security Switch Sense circuit for an open. Perform VTSS VERIFICATION TEST - 1A.	All

Symptom:

*VTSS SIREN INOPERATIVE (EXPORT ONLY)

POSSIBLE CAUSES
SIREN FUNCTIONAL TEST
OPEN FUSED B(+) CIRCUIT
OPEN GROUND CIRCUIT
FAULTY SIREN
SIREN CONTROL CIRCUIT OPEN
SIREN CONTROL CIRCUIT SHORTED TO GROUND
REMOTE KEYLESS ENTRY MODULE

TEST	ACTION	APPLICABILITY
1	Ensure the IOD fuse is installed and the vehicle is in the Customer Usage Mode. Using the DRBIII®, read the module configuration and ensure it is configured for PREMIUM VTA. With the DRBIII®, actuate the SIREN. Does the Siren actuate and sound proper? Yes → The condition that caused this symptom is currently not present. Inspect the related wiring harness for a possible intermittent condition. Look for any chafed, pierced, pinched or partially broken wires. Perform VTSS VERIFICATION TEST - 1A. No → Go To 2	All
2	Disconnect the Siren connector. Measure the voltage of the Fused B(+) circuit in the Siren connector. Is the voltage above 10.0 volts? Yes → Go To 3 No → Repair the Fused B(+) circuit for an open between the IOD fuse and the Intrusion Sensor. Perform VTSS VERIFICATION TEST - 1A.	All
3	Turn the ignition off. Disconnect the Siren connector. Measure the resistance between ground and the Ground circuit in the Siren connector. Is the resistance below 5.0 ohms? Yes → Go To 4 No → Repair the Ground circuit for an open. Perform VTSS VERIFICATION TEST - 1A.	All

*VTSS SIREN INOPERATIVE (EXPORT ONLY) — Continued

TEST	ACTION	APPLICABILITY
4	Use the DRBIII® and set up as follows: Use the Scope input cable CH7058, Cable to Probe adapter CH7062, and the red and black test probes. Connect the scope input cable to the channel one connector on the DRBIII®. Attach the red and black leads and the cable to probe adapter to the scope input cable. Select DRBIII® Standalone. Select lab scope. Select Live. Select 12 volt square wave. Press F2 for Scope. Press F2 and use the down arrow to set voltage range to 20 volts. Press F2 again when complete. Disconnect the Siren connector. Connect the black lead to the chassis ground. Connect the red lead to the Siren Control circuits (cavities 1 & 2) in the Siren connector. Observe the voltage displayed on the DRBIII® Lab Scope. Is there a voltage square wave present in each cavity every 1 or 2 seconds? Yes → Replace the Siren in accordance with the Service Information. Perform VTSS VERIFICATION TEST - 1A. No → Go To 5	All
5	Turn the ignition off. Disconnect the Siren connector. Disconnect the Remote Keyless Entry Module connector. Measure the resistance of the Siren Control circuit between the Siren connector (cavities 1&2) and the RKE module connector (cavity 15). Is the resistance below 5.0 ohms at all cavities? Yes → Go To 6 No → Repair the Siren Control circuit for an open between the Siren and the RKE module connector. Perform VTSS VERIFICATION TEST - 1A.	All
6	Turn the ignition off. Disconnect the Siren connector. Disconnect the Remote Keyless Entry Module connector. Measure the resistance of the Siren Control circuit to ground. Is the resistance below 1000.0 ohms? Yes → Repair the Siren Control circuit for a short to ground. Perform VTSS VERIFICATION TEST - 1A. No → Replace the Remote Keyless Entry Module in accordance with the Service Information. Perform VTSS VERIFICATION TEST - 1A.	All

Verification Tests

40/41TE (NGC) TRANSMISSION VERIFICATION TEST - VER 1	APPLICABILITY
1. NOTE: After completion of the Transmission Verification Test, the Powertrain Verification Test must be performed. Refer to the Powertrain Category. 2. Connect the DRBIII® to the Data Link Connector (DLC). 3. Reconnect any disconnected components. 4. With the DRBIII®, erase all Transmission DTC's, also erase the PCM DTC's. 5. Perform *PRNDL FAULT CLEARING PROCEDURE after completion of repairs for P0706 CHECK SHIFTER SIGNAL. 6. With the DRBIII®, display Transmission Temperature. Start and run the engine until the Transmission Temperature is HOT, above 43° C or 110° F. 7. Check the transmission fluid and adjust if necessary. Refer to the Service Information for the Fluid Fill procedure. **8. NOTE: If the Transmission Control Module or Torque Converter has been replaced, or if the Transmission has been repaired or replaced, it is necessary to perform the DRBIII® Quick Learn Procedure and reset the "Pinion Factor".** 9. Road test the vehicle. With the DRBIII®, monitor the engine RPM. Make 15 to 20 1-2, 2-3, 3-4 upshifts. Perform these shifts from a standing start to 45 MPH with a constant throttle opening of 20 to 25 degrees. 10. Below 25 MPH, make 5 to 8 wide open throttle kickdowns to 1st gear. Allow at least 5 seconds each in 2nd and 3rd gear between each kickdown. 11. For a specific DTC, drive the vehicle to the Symptom's When Monitored/When Set conditions to verify the DTC is repaired. 12. If equipped with AutoStick®, upshift and downshift several times using the AutoStick® feature during the road test. **13. NOTE: Use the EATX OBDII task manager to run Good Trip time in each gear, this will confirm the repair and to ensure that the DTC has not re-matured.** 14. Check for Diagnostic Trouble Codes (DTC's) during the road test. If a DTC sets during the road test , return to the Symptom list and perform the appropriate symptom. **15. NOTE: Erase P0700 DTC in the PCM to turn the MIL light off after making transmission repairs.** Were there any Diagnostic Trouble Codes set during the road test? Yes → Repair is not complete, refer to the appropriate symptom. No → Repair is complete.	All

Verification Tests — Continued

ABS VERIFICATION TEST - VER 1	APPLICABILITY
1. Turn the ignition off. 2. Connect all previously disconnected components and connectors. 3. Ensure all accessories are turned off and the battery is fully charged. 4. Ensure that the Ignition is on, and with the DRBIII, erase all Diagnostic Trouble Codes from ALL modules. Start the engine and allow it to run for 2 minutes and fully operate the system that was malfunctioning. 5. Turn the ignition off and wait 5 seconds. Turn the ignition on and using the DRBIII, read DTC's from ALL modules. 6. If any Diagnostic Trouble Codes are present, return to Symptom list and troubleshoot new or recurring symptom. **7. NOTE: For Sensor Signal and Pump Motor faults, the CAB must sense all 4 wheels at 25 km/h (15 mph) before it will extinguish the ABS Indicator.** 8. If there are no DTC's present after turning ignition on, road test the vehicle for at least 5 minutes. Perform several antilock braking stops. **9. Caution: Ensure braking capability is available before road testing.** 10. Again, with the DRBIII® read DTC's. If any DTC's are present, return to Symptom list. 11. If there are no Diagnostic Trouble Codes (DTC's) present, and the customer's concern can no longer be duplicated, the repair is complete. Are any DTC's present or is the original concern still present? Yes → Repair is not complete, refer to appropriate symptom. No → Repair is complete.	All

AIRBAG VERIFICATION TEST - VER 1	APPLICABILITY
1. Remove any special tools or jumper wires and reconnect all previously disconnected components - except the Battery. **2. WARNING: TO AVOID PERSONAL INJURY OR DEATH, TURN THE IGNITION ON, THEN RECONNECT THE BATTERY.** 3. Connect the DRBIII® to the Data Link Connector - use the most current software available. 4. Use the DRBIII® and erase the stored codes in all airbag system modules. 5. Turn the Ignition Off, and wait 15 seconds before turning the Ignition On. 6. Wait one minute, and read active codes and if there are none present read the stored codes. 7. Note: If equipped with Airbag On-Off switch, read the DTC's in all switch positions. 8. Note: Read the DTC's in all airbag system related modules. 9. If the DRBIII® shows any active or stored codes, return to the Symptom list and follow path specified for that trouble code. If no active or stored codes are present, the repair is complete. Are any DTC's present or is the original condition still present? YES Repair is not complete, refer to appropriate symptom list. NO Repair is complete.	All

Verification Tests — Continued

BODY VERIFICATION TEST - VER 1	APPLICABILITY
1. Disconnect all jumper wires and reconnect all previously disconnected components and connectors. **2. NOTE: If the SKIM or PCM was replaced, refer to the service information for proper programming procedures.** 3. If the Remote Keyless Entry module was replaced, using the DRBIII® select ″Theft Alarm″ ″VTSS″ ″Miscellaneous″ and ″Configure Module″. If the vehicle is equipped with VTSS, use the DRBIII® and enable VTSS. 4. Program all RKE transmitters and other options as necessary. 5. Ensure all accessories are turned off and the battery is fully charged. 6. With the DRBIII®, record and erase all DTC's from ALL modules. Start and run the engine for 2 minutes. Operate all functions of the system that caused the original concern. 7. Turn the ignition off and wait 5 seconds. Turn the ignition on and using the DRBIII®, read DTC's from ALL modules. Are any DTC's present or is the original condition still present? Yes → Repair is not complete, refer to the appropriate symptom. No → Repair is complete.	All

POWERTRAIN VERIFICATION TEST VER - 1	APPLICABILITY
1. NOTE: After completing the Powertrain Verification Test the Transmission Verification Test must be performed. **2. NOTE: If the PCM has been replace and the vehicle is equipped with a 2.4L Turbo, Manual Transmission, the Pinion Factor MUST be programmed into the PCM. Failure to do so will cause the speedometer to become inoperative or inaccurate.** **3. NOTE: If the PCM has been replaced and the correct VIN and mileage have not been programmed, a DTC will be set in the ABS Module, Airbag Module and the SKIM.** **4. NOTE: If the vehicle is equipped with a Sentry Key Immobilizer System, Secret Key data must be updated. Refer to the Service Information for the PCM, SKIM and the Transponder (ignition key) for programming information.** 5. Inspect the vehicle to ensure that all components related to the repair are connected properly. 6. Inspect the engine oil for fuel contamination. Replace the oil and filter as necessary. 7. Attempt to start the engine. 8. If the No Start condition is still present, refer to the symptom list and perform the diagnostic testing as necessary. refer to and Technical Service Bulletins that may apply. 9. Run the engine for one warm-up cycle to verify operation. 10. With the DRBIII®, confirm that no DTCs or Secondary Indicators are present and that all components are functioning properly. 11. If a DTC is present, refer to the appropriate category and select the corresponding symptom. Are any DTCs present? Yes → Repair is not complete, refer to appropriate symptom. No → Repair is complete.	All

Verification Tests — Continued

SKIS VERIFICATION	APPLICABILITY
1. Reconnect all previously disconnected components and connectors. 2. Obtain the vehicle's unique Personal Identification Number (PIN) assigned to it's original SKIM. This number can be obtained from the vehicle's invoice or Chrysler's Customer Center (1-800-992-1997). **3. NOTE: When entering the PIN, care should be taken because the SKIM will only allow 3 consecutive attempts to enter the correct PIN. If 3 consecutive incorrect PIN's are entered the SKIM will Lock Out the DRB III for 1 hour.** 4. To exit Lock Out mode, the ignition key must remain in the Run position continually for 1 hour. Turn off all accessories and connect a battery charger if necessary. 5. With the DRB III, select Theft Alarm, SKIM and Miscellaneous. Then select desired procedure and follow the steps that will be displayed. 6. If the SKIM has been replaced, ensure all of the vehicle ignition keys are programmed to the new SKIM. **7. NOTE: Prior to returning vehicle to the costumer, perform a module scan to be sure that all DTC's are erased. Erase any DTC's that are found.** 8. With the DRB III erase all DTC's. Perform 5 ignition key cycles leaving the key on for at least 90 seconds per cycle. 9. With the DRB III, read the SKIM DTC's. Are there any SKIM DTC's? Yes → Repair is not complete, refer to appropriate symptom. No → Repair is complete.	All

VTSS VERIFICATION TEST - 1A	APPLICABILITY
1. Ensure all doors and the decklid are closed. 2. Open the driver door. 3. Remove the ignition key (but keep in hand). 4. Lock the doors with RKE transmitter. 5. Close the driver door. 6. - If the VTSS indicator lamp flashes rapidly and after approximately 15 seconds changes to a slower flash, the system is operational. 7. - If the indicator fails to flash as described, there is a problem with the system. Select the Identifying VTSS symptom from the Symptom List to troubleshoot. Does the VTSS indicator lamp flash as specified? Yes → Repair is complete. No → Repair is not complete, refer to appropriate symptom.	All

8.0 COMPONENT LOCATIONS

8.1 AIRBAG SYSTEM

8.1.1 AIRBAG CONTROL MODULE (ACM)

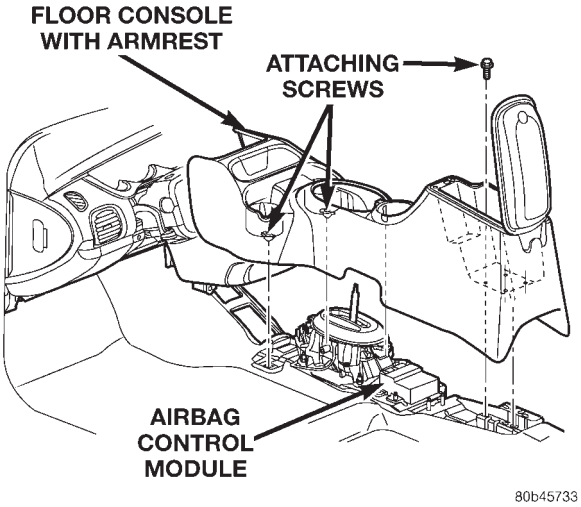

8.1.2 AIRBAG MODULE (DRIVER)

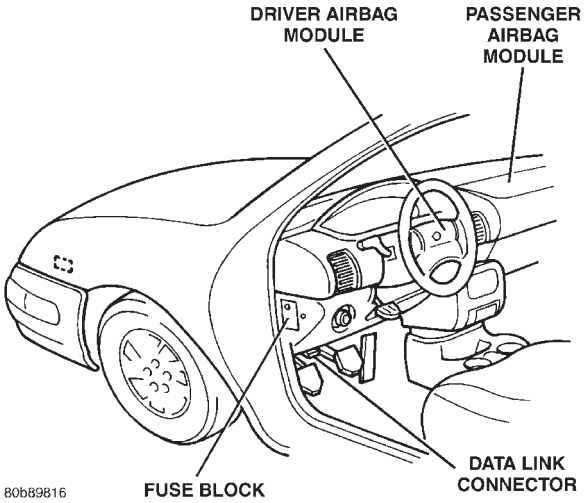

8.1.3 AIRBAG MODULE (PASSENGER)

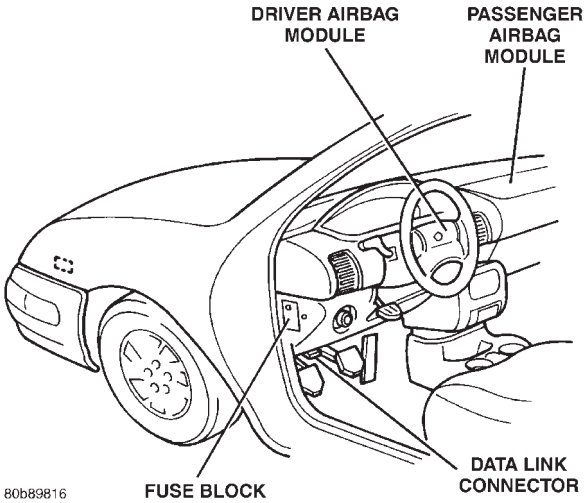

8.1 AIRBAG SYSTEM (Continued)

8.1.4 CLOCKSPRING

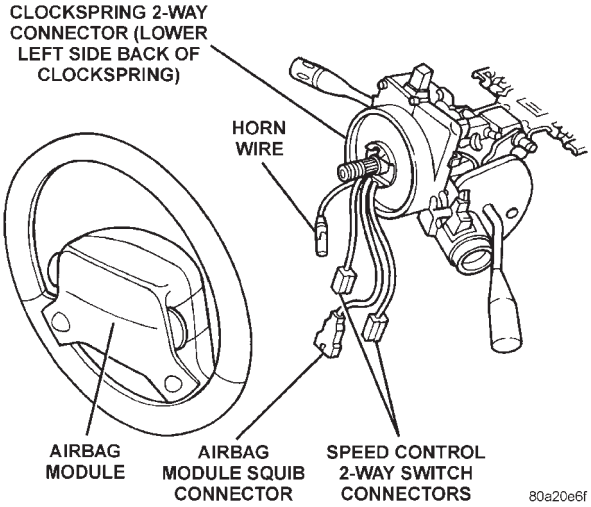

8.1.5 SIDE IMPACT AIRBAG CONTROL MODULE (SIACM)

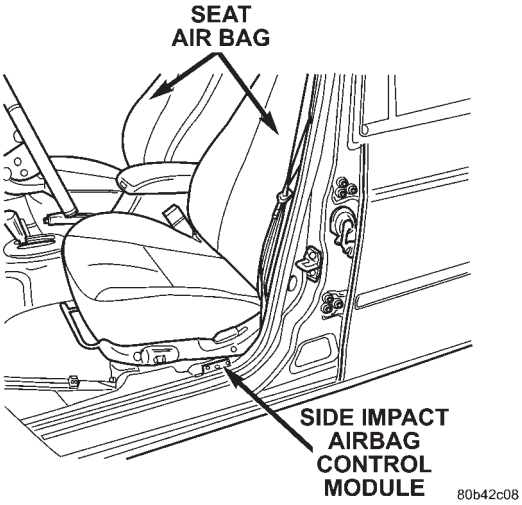

8.2 DATA LINK CONNECTOR

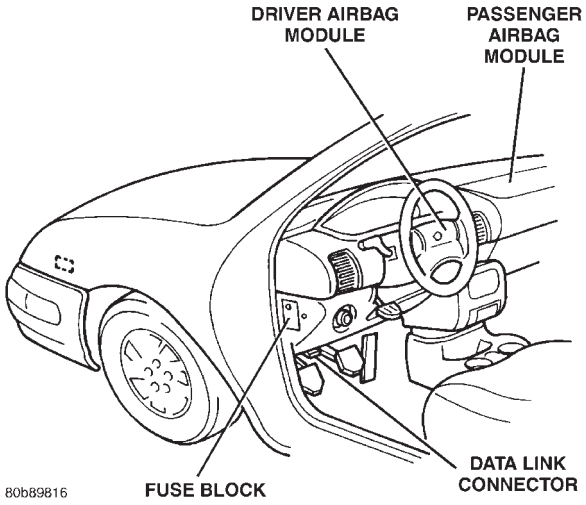

8.3 FUSE BLOCK

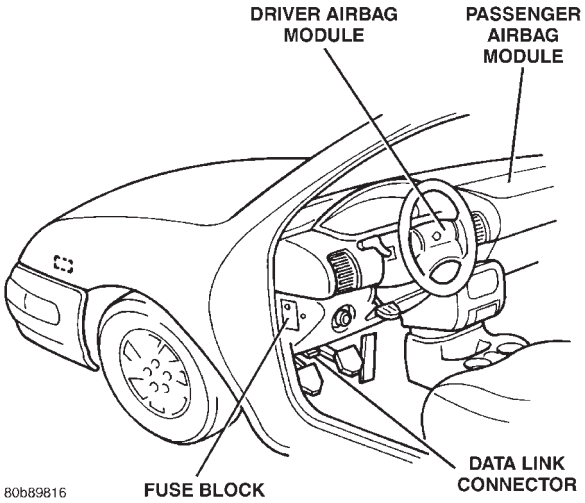

8.4 INSTRUMENT CLUSTER

8.4.1 BASE CLUSTER

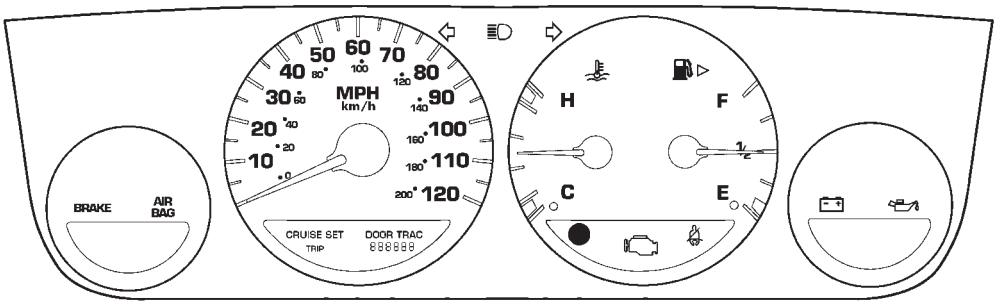

80bce986

8.4.2 PREMIUM CLUSTER

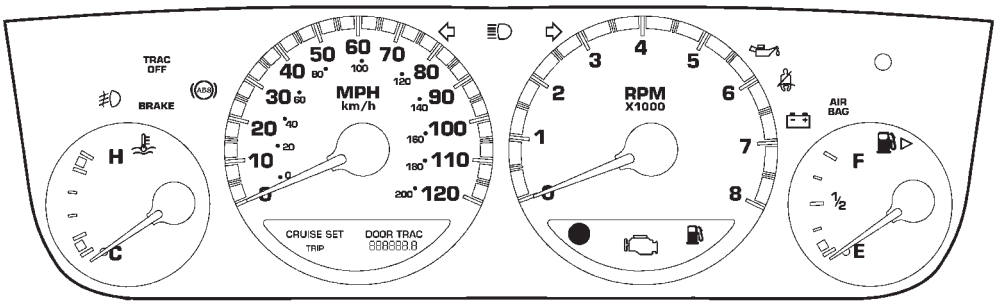

80bce987

8.5 POWER DOOR LOCKS

8.5.1 REMOTE KEYLESS ENTRY MODULE

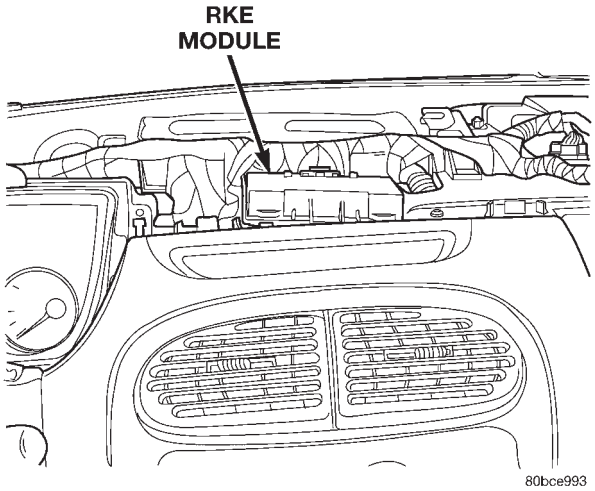

8.5.2 DECKLID RELEASE SOLENOID

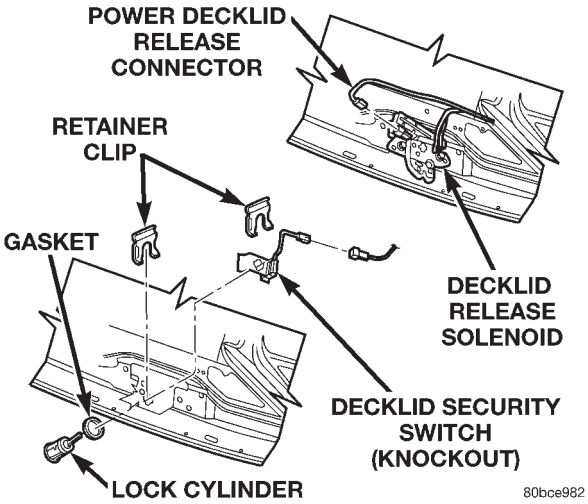

8.5.3 DOOR LOCK MOTOR

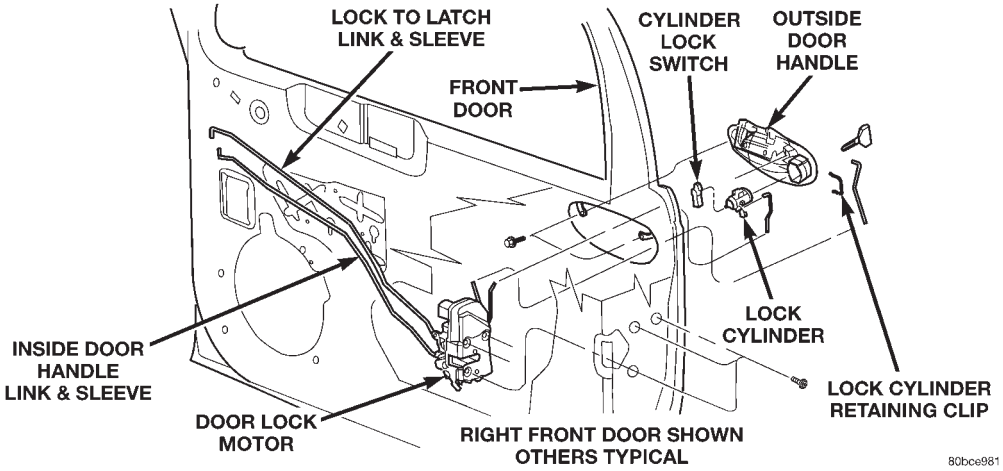

8.6 VEHICLE COMMUNICATION

8.6.1 CONTROLLER ANTILOCK BRAKE MODULE

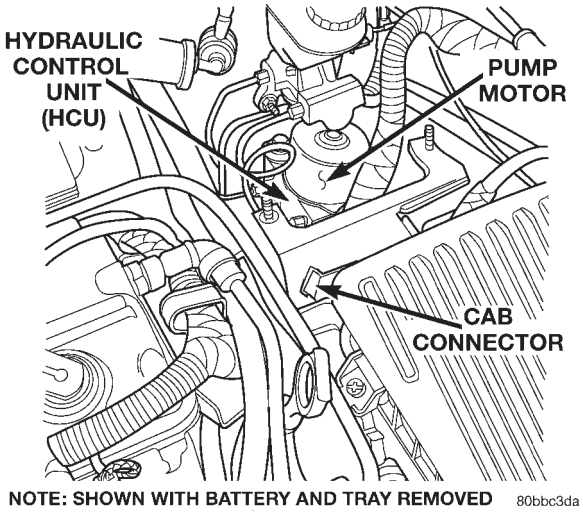

8.6.2 SENTRY KEY IMMOBILIZER MODULE (SKIM)

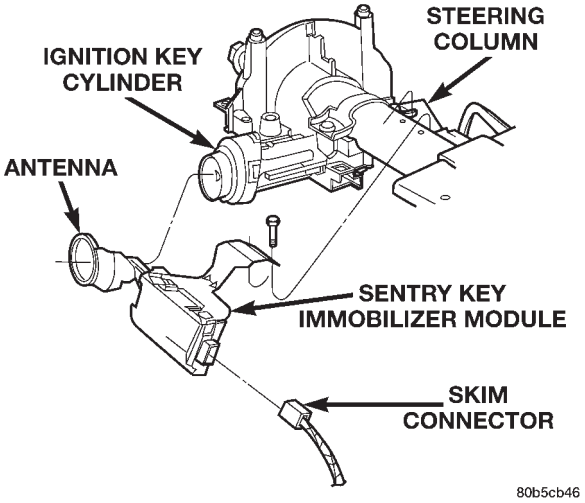

8.7 VEHICLE THEFT SECURITY

8.7.1 REMOTE KEYLESS ENTRY MODULE

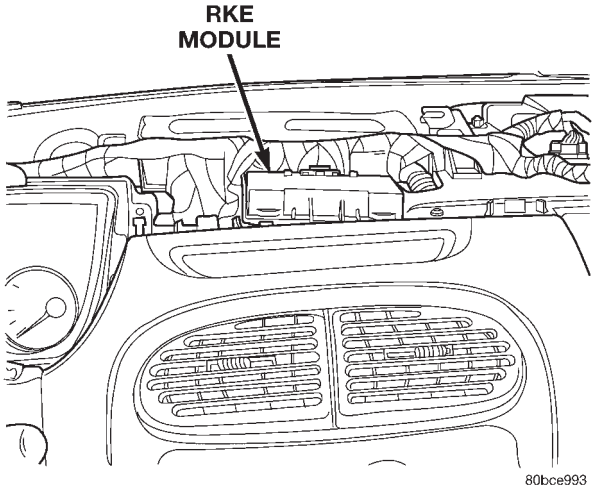

8.7.2 HOOD AJAR SWITCH (EXPORT)

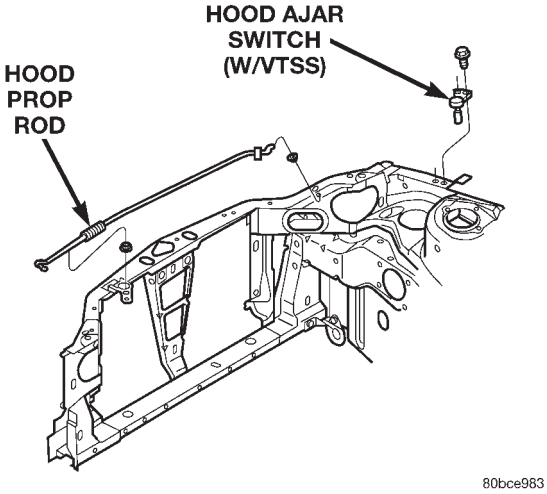

8.7.3 DOOR CYLINDER LOCK SWITCH (IF EQUIPPED)

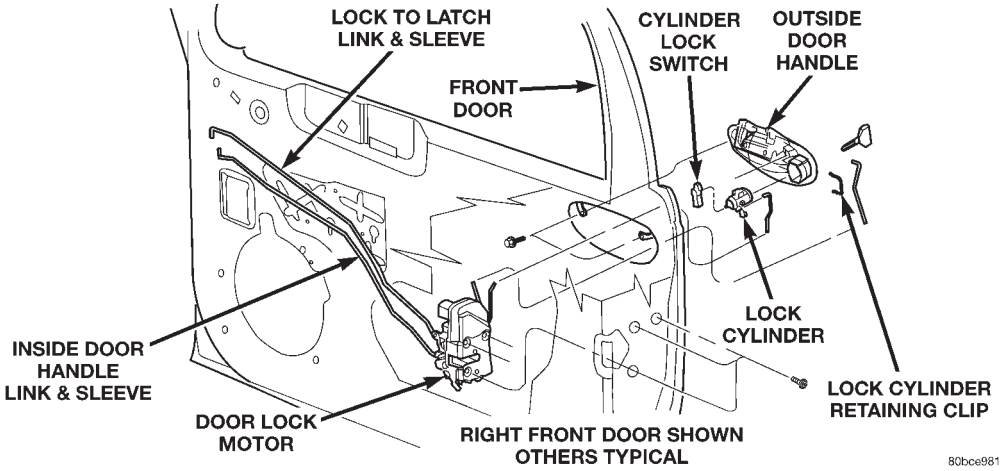

8.7.4 DECKLID SECURITY SWITCH

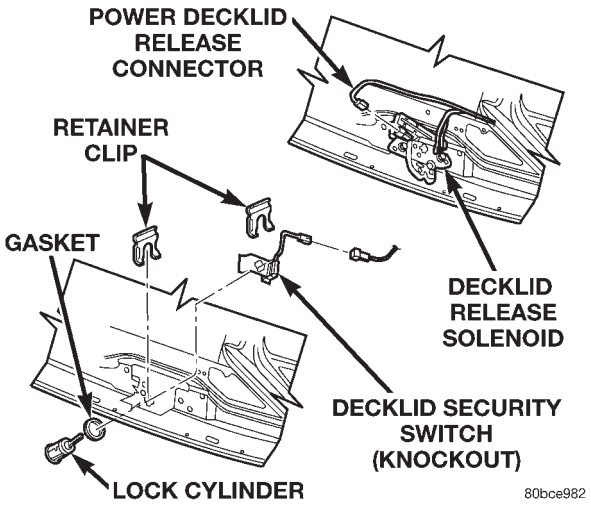

NOTES

9.0 CONNECTOR PINOUTS

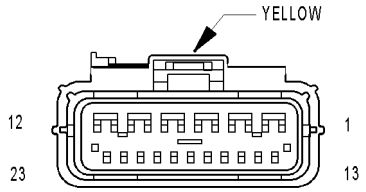

AIRBAG CONTROL MODULE

AIRBAG CONTROL MODULE - YELLOW 23 WAY

CAV	CIRCUIT	FUNCTION
1	-	-
2	-	-
3	-	-
4	Z6 20BK/PK	GROUND
5	R45 20DG/LB	DRIVER SQUIB 1 LINE 2
6	R43 20BK/LB	DRIVER SQUIB 1 LINE 1
7	R42 20BK/YL	PASSENGER SQUIB 1 LINE 1
8	R44 20DG/YL	PASSENGER SQUIB 1 LINE 2
9	-	-
10	-	-
11	-	-
12	-	-
13	-	-
14	F15 20DG/WT	FUSED IGNITION SWITCH OUTPUT (RUN-START)
15	F25 20TN/LG	FUSED IGNITION SWITCH OUTPUT (RUN)
16	-	-
17	-	-
18	-	-
19	-	-
20	-	-
21	D25 20VT/YL	PCI BUS
22	-	-
23	-	-

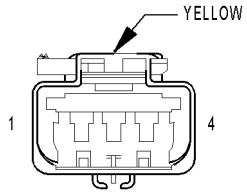

C208

C208 - YELLOW (SEAT SIDE)

CAV	CIRCUIT
1	-
2	-
3	R32 18OR
4	R34 18WT

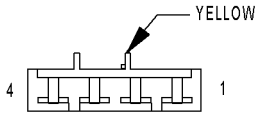

C208

C208 - YELLOW (SIDE IMPACT AIRBAG JUMPER SIDE)

CAV	CIRCUIT
1	-
2	-
3	R32 20YL/OR
4	R34 20OR/YL

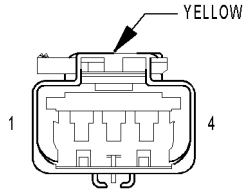

C209

C209 - YELLOW (SEAT SIDE)

CAV	CIRCUIT
1	-
2	-
3	R31 18OR
4	R33 18WT

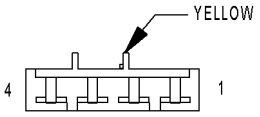

C209

C209 - YELLOW (SIDE IMPACT AIRBAG JUMPER SIDE)

CAV	CIRCUIT
1	-
2	-
3	R31 20YL/OR
4	R33 20OR/YL

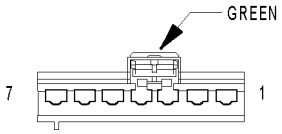

CLOCKSPRING

CLOCKSPRING - GREEN 7 WAY

CAV	CIRCUIT	FUNCTION
1	R45 20DG/LB	DRIVER SQUIB 1 LINE 2
2	R43 20BK/LB	DRIVER SQUIB 1 LINE 1
3	-	-
4	-	-
5	X3 22BK/RD	HORN RELAY CONTROL
6	V37 20RD/LG (2.0L SPEED CONTROL)	S/C SWITCH SIGNAL
7	K914 20BR/WT (2.0L SPEED CONTROL)	GROUND

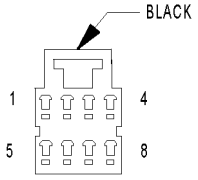

COMPACT DISC CHANGER

COMPACT DISC CHANGER - BLACK 8 WAY

CAV	CIRCUIT	FUNCTION
1	24GY/WT	AUDIO OUT RIGHT
2	24OR/YL	PANEL LAMPS DIMMER SIGNAL
3	24VT/YL	PCI BUS
4	24RD	FUSED IGNITION SWITCH OUTPUT
5	24DG/WT	AUDIO OUT LEFT
6	24BK/OR	GROUND
7	22BK/YL	GROUND
8	22GY/YL	B(+)

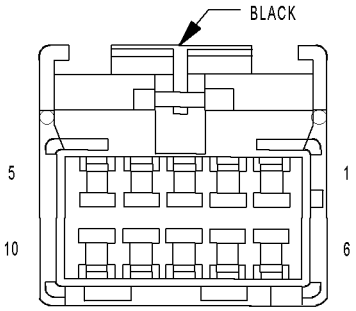

COMPASS/TEMPERATURE MIRROR

COMPASS/TEMPERATURE MIRROR - BLACK 10 WAY

CAV	CIRCUIT	FUNCTION
1	F20 20BK/WT	FUSED IGNITION SWITCH OUTPUT (RUN)
2	M1 20BK/PK	FUSED B(+)
3	-	-
4	-	-
5	D25 20BK/VT	PCI BUS
6	Z3 20BK/OR	GROUND
7	M2 20BK/YL	COURTESY LAMP CONTROL
8	-	-
9	-	-
10	Z3 20BK/OR	GROUND

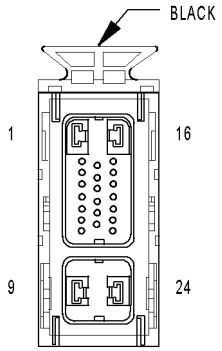

CONTROLLER ANTILOCK BRAKE

CONTROLLER ANTILOCK BRAKE - BLACK 24 WAY

CAV	CIRCUIT	FUNCTION
1	Z1 12BK	GROUND
2	B1 18YL/DB	RIGHT REAR WHEEL SPEED SENSOR SIGNAL
3	B2 18YL	RIGHT REAR WHEEL SPEED SENSOR 12 VOLT SUPPLY
4	-	-
5	D25 18VT/YL	PCI BUS
6	B6 18WT/DB	RIGHT FRONT WHEEL SPEED SENSOR SIGNAL
7	B7 18WT	RIGHT FRONT WHEEL SPEED SENSOR 12 VOLT SUPPLY
8	-	-
9	A20 12RD/DB	FUSED B(+)
10	F12 18DB/WT (2.0L)	FUSED IGNITION SWITCH OUTPUT (RUN-START)
10	F12 18DB/RD (2.4L TURBO)	FUSED IGNITION SWITCH OUTPUT (RUN-START)
11	-	-
12	-	-
13	-	-
14	-	-
15	-	-
16	Z1 12BK	GROUND
17	-	-
18	L50 18WT/TN	BRAKE LAMP SWITCH OUTPUT
19	B3 18LG/DB	LEFT REAR WHEEL SPEED SENSOR SIGNAL
20	B4 18LG	LEFT REAR WHEEL SPEED SENSOR 12 VOLT SUPPLY
21	-	-
22	B8 18RD/DB	LEFT FRONT WHEEL SPEED SENSOR SIGNAL
23	B9 18RD	LEFT FRONT WHEEL SPEED SENSOR 12 VOLT SUPPLY
24	A10 12RD/DG	FUSED B(+)

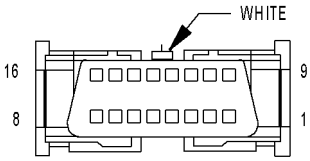

DATA LINK CONNECTOR

DATA LINK CONNECTOR - WHITE 16 WAY

CAV	CIRCUIT	FUNCTION
1	-	-
2	D25 20VT/YL	PCI BUS (PCM)
3	-	-
4	Z12 20BK/TN	GROUND
5	Z12 20BK/TN	GROUND
6	-	-
7	D21 20PK	SCI TRANSMIT (PCM)
8	-	-
9	D6 20PK/LB (2.0L)	SCI RECEIVE (TCM)
10	-	-
11	-	-
12	D20 20LG	SCI RECEIVE (PCM)
13	-	-
14	-	-
15	D15 20WT/DG (2.0L)	SCI TRANSMIT (TCM)
16	A14 18RD/WT	FUSED B(+)

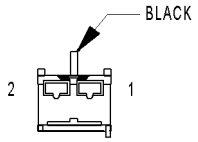

DECKLID RELEASE SWITCH (POWER RELEASE)

DECKLID RELEASE SWITCH (POWER RELEASE) - BLACK 2 WAY

CAV	CIRCUIT	FUNCTION
1	Q33 20BR/LB	DECKLID RELEASE RELAY CONTROL
2	Z1 20BK	GROUND

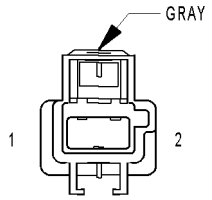

DECKLID SECURITY SWITCH (KNOCK OUT)

DECKLID SECURITY SWITCH (KNOCK OUT) - GRAY 2 WAY

CAV	CIRCUIT	FUNCTION
1	Z1 20BK	GROUND
2	G71 20VT/YL	DECKLID SECURITY SWITCH SENSE

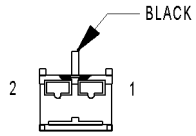

DECKLID SOLENOID

DECKLID SOLENOID - BLACK 2 WAY

CAV	CIRCUIT	FUNCTION
1	Q2 14LG/BK	DECKLID RELEASE RELAY OUTPUT
2	Z1 14BK	GROUND

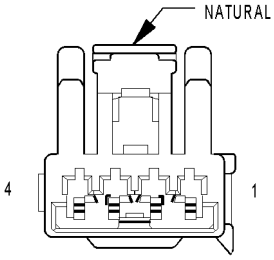

DOME LAMP/INTRUSION SENSOR (EXPORT)

DOME LAMP/INTRUSION SENSOR (EXPORT) - NATURAL 4 WAY

CAV	CIRCUIT	FUNCTION
1	M2 20YL	COURTESY LAMP CONTROL
2	M1 18PK	FUSED B(+)
3	Z1 18BK	GROUND
4	G120 18WT/DB	INTRUSION SENSOR SIGNAL

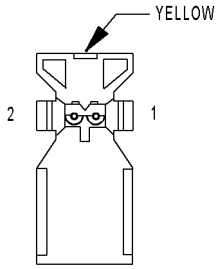

DRIVER AIRBAG SQUIB 1

DRIVER AIRBAG SQUIB 1 - YELLOW 2 WAY

CAV	CIRCUIT	FUNCTION
1	R43 18BK/LB	DRIVER SQUIB 1 LINE 1
2	R45 18DG/LB	DRIVER SQUIB 1 LINE 2

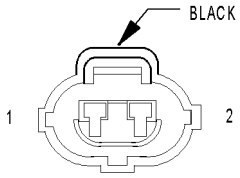

DRIVER DOOR AJAR SWITCH

DRIVER DOOR AJAR SWITCH - BLACK 2 WAY

CAV	CIRCUIT	FUNCTION
1	G75 20TN	LEFT FRONT DOOR AJAR SWITCH SENSE
2	Z14 20BK/YL	GROUND

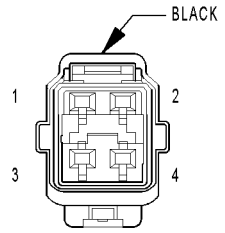

DRIVER DOOR LOCK MOTOR/AJAR SWITCH

DRIVER DOOR LOCK MOTOR/AJAR SWITCH - BLACK 4 WAY

CAV	CIRCUIT	FUNCTION
1	G75 20TN (LHD)	LEFT FRONT DOOR AJAR SWITCH SENSE
1	G74 20TN/RD (RHD)	RIGHT FRONT DOOR AJAR SWITCH SENSE
2	Z14 20BK/YL	GROUND
3	P34 18PK/BK	DRIVER DOOR UNLOCK RELAY OUTPUT
4	P33 18OR/BK	DOOR LOCK RELAY OUTPUT

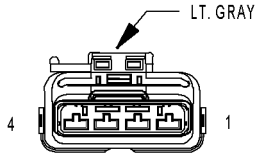

FUEL PUMP MODULE

FUEL PUMP MODULE - LT. GRAY 4 WAY

CAV	CIRCUIT	FUNCTION
1	Z1 18BK	GROUND
2	Z2 20BK/LG	GROUND
3	G4 20DB	FUEL LEVEL SENSOR SIGNAL
4	A141 18DG/WT	FUEL PUMP RELAY OUTPUT

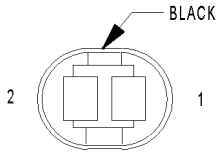

HOOD AJAR SWITCH (EXPORT)

HOOD AJAR SWITCH (EXPORT) - BLACK 2 WAY

CAV	CIRCUIT	FUNCTION
1	G70 20BR/TN	HOOD AJAR SWITCH SENSE
2	Z1 20BK	GROUND

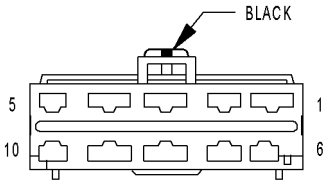

IGNITION SWITCH C1

IGNITION SWITCH C1 - BLACK 10 WAY

CAV	CIRCUIT	FUNCTION
1	A1 14RD	FUSED B(+)
2	A21 14DB	IGNITION SWITCH OUTPUT (RUN-START)
3	F30 16RD/BK	IGNITION SWITCH OUTPUT (RUN-ACC)
4	F1 16DB/BK	FUSED B(+)
5	G26 22LB	KEY-IN IGNITION SWITCH SENSE
6	A41 14YL	IGNITION SWITCH OUTPUT (START)
7	A31 14BK/WT	IGNITION SWITCH OUTPUT (RUN-ACC)
8	A22 12BK/OR	IGNITION SWITCH OUTPUT (RUN)
9	A2 12PK/BK	FUSED B(+)
10	-	-

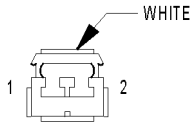

IGNITION SWITCH C2

IGNITION SWITCH C2 - WHITE 2 WAY

CAV	CIRCUIT	FUNCTION
1	A81 20DG/RD	FUSED B(+)
2	F11 20RD/WT (AUTO-STICK)	IGNITION SWITCH OUTPUT (OFF-RUN-START)

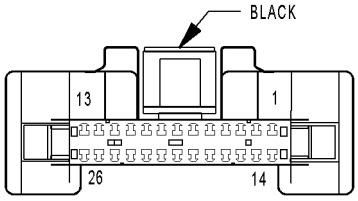

INSTRUMENT CLUSTER

INSTRUMENT CLUSTER - BLACK 26 WAY

CAV	CIRCUIT	FUNCTION
1	L38 16BR/WT (EXPORT)	REAR FOG LAMP FEED
2	D25 20VT/YL	PCI BUS
3	M2 20YL	COURTESY LAMP CONTROL
4	L27 16WT/TN (DAYTIME RUNNING LAMPS)	FOG LAMP SWITCH SENSE
4	L39 20LB (EXCEPT EXPORT/EXCEPT DAYTIME RUNNING LAMPS)	FRONT FOG LAMP SWITCH OUTPUT
4	L39 16LB (EXPORT)	FRONT FOG LAMP SWITCH OUTPUT
5	G69 20BK/OR	VTSS INDICATOR DRIVER
6	E19 22RD	PANEL LAMPS DIMMER SIGNAL
7	G4 20DB	FUEL LEVEL SENSOR SIGNAL
8	-	-
9	G5 20DB/WT (AUTOSTICK)	FUSED IGNITION SWITCH OUTPUT (RUN-START)
10	Z3 16BK/OR	GROUND
11	-	-
12	E2 22OR	PANEL LAMPS DRIVER
13	M9 20LB/OR	PASSENGER DOOR AJAR/RKE SENSE
14	L7 18BK/YL	HEADLAMP SWITCH OUTPUT
15	F11 20RD/WT (AUTO-STICK)	IGNITION SWITCH OUTPUT (OFF-RUN-START)
15	G5 20DB/WT (EXCEPT AU-TOSTICK)	FUSED IGNITION SWITCH OUTPUT (RUN-START)
16	L161 18LG/OR (EXCEPT EXPORT)	LEFT TURN SIGNAL
17	L160 18TN/RD (EXCEPT EXPORT)	RIGHT TURN SIGNAL
18	L61 18LG	LEFT TURN SIGNAL
19	L60 18TN	RIGHT TURN SIGNAL
20	L4 16VT/WT (EXCEPT EX-PORT)	DIMMER SWITCH LOW BEAM OUTPUT
21	M1 18PK	FUSED B(+)
22	G11 20WT/BK	RED BRAKE WARNING INDICATOR DRIVER
23	G26 22LB	KEY-IN IGNITION SWITCH SENSE
24	G75 20TN/BK (EXCEPT EXPORT)	LEFT FRONT DOOR AJAR SWITCH SENSE
24	G74 20TN/RD (EXPORT)	RIGHT FRONT DOOR AJAR SWITCH SENSE
25	G10 20LG/RD	SEAT BELT SWITCH SENSE
26	L3 16RD/OR	DIMMER SWITCH HIGH BEAM OUTPUT

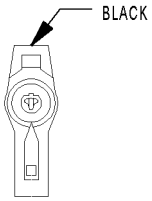

LEFT CYLINDER LOCK SWITCH (PREMIUM)

LEFT CYLINDER LOCK SWITCH (PREMIUM) - BLACK 2 WAY

CAV	CIRCUIT	FUNCTION
1	P97 18LG	LEFT DOOR SWITCH MUX
2	Z14 18BK	GROUND

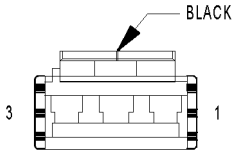

LEFT DOOR LOCK SWITCH

LEFT DOOR LOCK SWITCH - BLACK 3 WAY

CAV	CIRCUIT	FUNCTION
1	-	-
2	P97 20LG	LEFT DOOR SWITCH MUX
2	P97 18LG (PREMIUM)	LEFT DOOR SWITCH MUX
3	Z14 20BK/YL	GROUND
3	Z14 18BK (PREMIUM)	GROUND

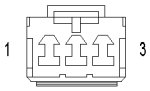

LEFT FRONT DOOR SPEAKER

LEFT FRONT DOOR SPEAKER - 3 WAY

CAV	CIRCUIT	FUNCTION
1	X55 20BR/RD	LEFT FRONT SPEAKER (-)
2	-	-
3	X53 20DG	LEFT FRONT SPEAKER (+)

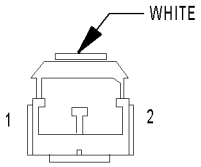

LEFT INSTRUMENT PANEL SPEAKER

LEFT INSTRUMENT PANEL SPEAKER - WHITE 2 WAY

CAV	CIRCUIT	FUNCTION
1	X53 20DG	LEFT FRONT SPEAKER (+)
2	X55 20BR/RD	LEFT FRONT SPEAKER (-)

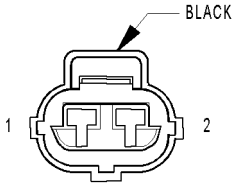

LEFT REAR DOOR AJAR SWITCH

LEFT REAR DOOR AJAR SWITCH - BLACK 2 WAY

CAV	CIRCUIT	FUNCTION
1	G76 20TN/YL	PASSENGER DOOR AJAR/RKE SENSE
2	Z1 20BK	GROUND

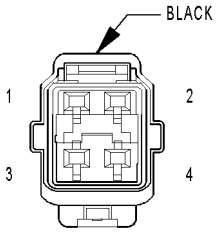

LEFT REAR DOOR LOCK MOTOR/AJAR SWITCH

LEFT REAR DOOR LOCK MOTOR/AJAR SWITCH - BLACK 4 WAY

CAV	CIRCUIT	FUNCTION
1	G77 20TN/OR	PASSENGER DOOR AJAR/RKE SENSE
2	Z1 20BK	GROUND
3	P36 18PK/VT	DOOR UNLOCK RELAY OUTPUT
4	P33 18OR/BK	DOOR LOCK RELAY OUTPUT

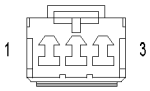

LEFT REAR SPEAKER

LEFT REAR SPEAKER - 3 WAY

CAV	CIRCUIT	FUNCTION
1	X51 20BR/YL	LEFT REAR SPEAKER (+)
2	-	-
3	X57 20BR/LB	LEFT REAR SPEAKER (-)

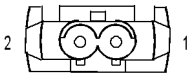

LEFT SEAT AIRBAG SQUIB

LEFT SEAT AIRBAG SQUIB - 2 WAY

CAV	CIRCUIT	FUNCTION
1	R31 18OR	LEFT SEAT SQUIB LINE 2
2	R33 18WT	LEFT SEAT SQUIB LINE 1

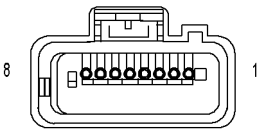

LEFT SIDE IMPACT AIRBAG CONTROL MODULE

LEFT SIDE IMPACT AIRBAG CONTROL MODULE - 8 WAY

CAV	CIRCUIT	FUNCTION
1	F15 20DG/WT	FUSED IGNITION SWITCH OUTPUT (RUN-START)
2	-	-
3	R33 20OR/YL	LEFT SEAT SQUIB LINE 1
4	R31 20YL/OR	LEFT SEAT SQUIB LINE 2
5	Z6 20BK/PK	GROUND
6	-	-
7	-	-
8	D25 20VT/YL	PCI BUS

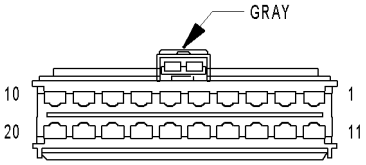

MULTI-FUNCTION SWITCH

MULTI-FUNCTION SWITCH - GRAY 20 WAY

CAV	CIRCUIT	FUNCTION
1	L50 18WT/TN (EXCEPT EXPORT)	BRAKE LAMP SWITCH OUTPUT
2	L61 18LG	LEFT TURN SIGNAL
2	L61 18LG (EXPORT)	LEFT TURN SIGNAL
3	L6 20RD/WT	FUSED IGNITION SWITCH OUTPUT (RUN-ACC)
4	L63 18DG/RD	LEFT TURN SIGNAL
4	L63 18DG/RD (EXPORT)	LEFT TURN SIGNAL
5	L62 18BR/RD	RIGHT TURN SIGNAL
5	L62 18BR/RD (EXPORT)	RIGHT TURN SIGNAL
6	L60 18TN	RIGHT TURN SIGNAL
6	L60 18TN (EXPORT)	RIGHT TURN SIGNAL
7	Z3 20BK/OR	GROUND
8	E19 22RD	PANEL LAMPS DIMMER SIGNAL
9	L7 18BK/YL	HEADLAMP SWITCH OUTPUT
10	-	-
11	A15 18WT	FUSED B(+)
12	L38 16BR/WT (EXPORT)	REAR FOG LAMP FEED
12	L38 16BR/WT (EXPORT)	REAR FOG LAMP FEED
13	L4 14VT/WT (EXCEPT EXPORT)	DIMMER SWITCH LOW BEAM OUTPUT
13	F61 16WT/OR (EXPORT)	FUSED B(+)
14	F39 14PK/LG (EXCEPT EXPORT)	FRONT FOG LAMP SWITCH OUTPUT
14	L39 16LB (EXPORT)	FRONT FOG LAMP SWITCH OUTPUT
14	L39 16LB (EXPORT)	FRONT FOG LAMP SWITCH OUTPUT
15	-	-
16	L4 12VT/WT	DIMMER SWITCH LOW BEAM OUTPUT
17	L33 14LG/BR	DIMMER SWITCH HIGH BEAM OUTPUT
18	F3 12LB/OR	FUSED B(+)
19	F3 12LB/OR	FUSED B(+)
20	F33 18PK/RD	FUSED B(+)

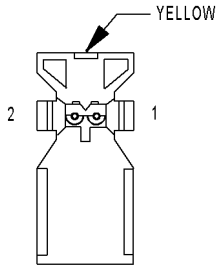

PASSENGER AIRBAG SQUIB 1

PASSENGER AIRBAG SQUIB 1 - YELLOW 2 WAY

CAV	CIRCUIT	FUNCTION
1	R42 20BK/YL	PASSENGER SQUIB 1 LINE 1
2	R44 20DG/YL	PASSENGER SQUIB 1 LINE 2

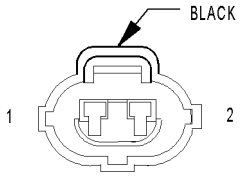

PASSENGER DOOR AJAR SWITCH

PASSENGER DOOR AJAR SWITCH - BLACK 2 WAY

CAV	CIRCUIT	FUNCTION
1	G74 20TN	RIGHT FRONT DOOR AJAR SWITCH SENSE
2	Z14 20BK/YL	GROUND

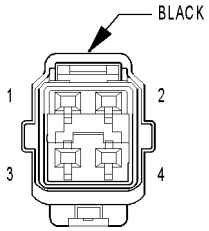

PASSENGER DOOR LOCK MOTOR/AJAR SWITCH

PASSENGER DOOR LOCK MOTOR/AJAR SWITCH - BLACK 4 WAY

CAV	CIRCUIT	FUNCTION
1	G74 20TN/RD (LHD)	RIGHT FRONT DOOR AJAR SWITCH SENSE
1	G75 20TN (RHD)	LEFT FRONT DOOR AJAR SWITCH SENSE
2	Z14 20BK/YL	GROUND
3	P36 18PK/VT	DOOR UNLOCK RELAY OUTPUT
4	P33 18OR/BK	DOOR LOCK RELAY OUTPUT

POWER DISTRIBUTION CENTER

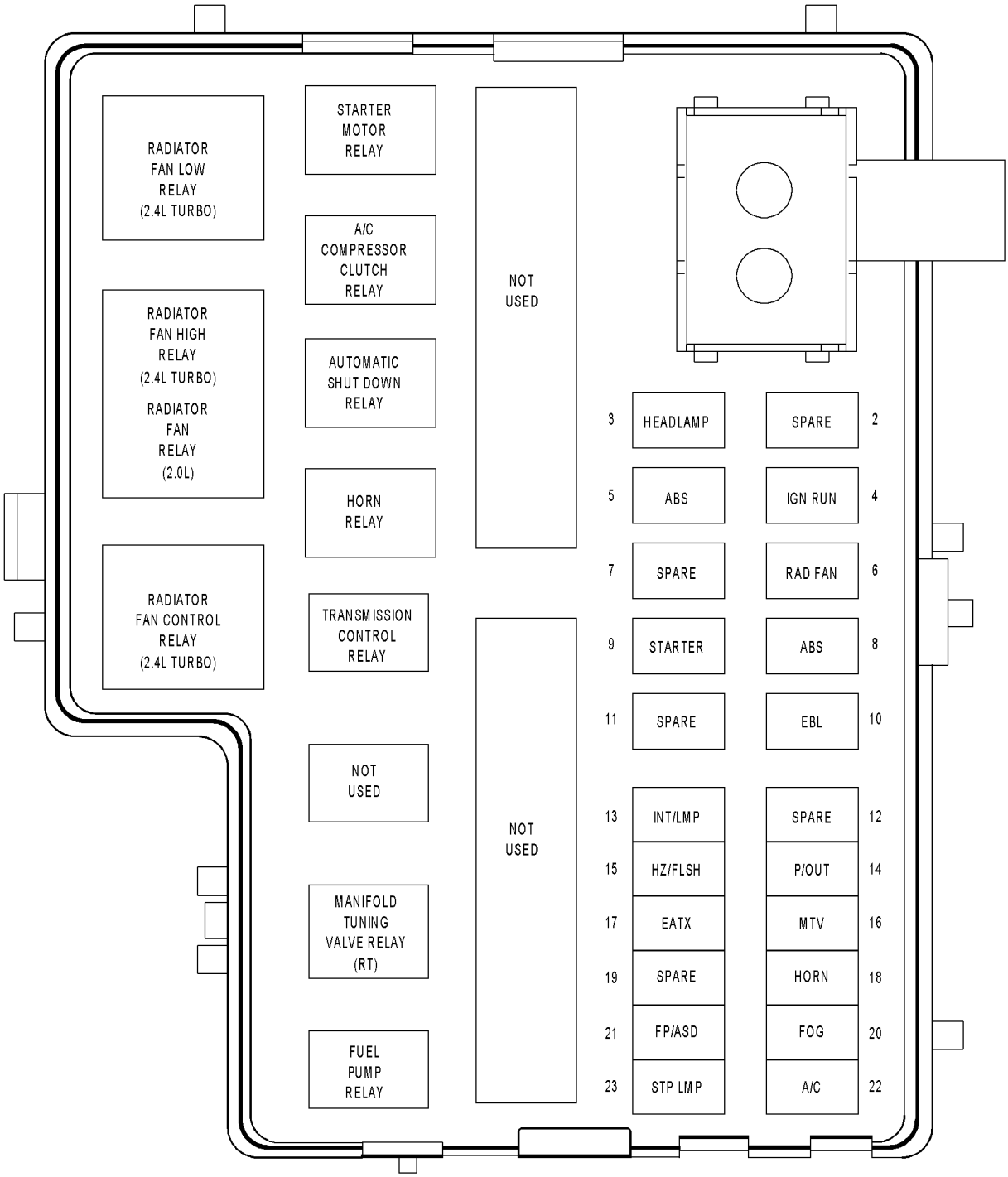

HORN RELAY

CAV	CIRCUIT	FUNCTION
39	F62 20RD (2.0L)	FUSED B(+)
39	F62 18RD (2.4L TURBO)	FUSED B(+)
40	F62 20RD (2.0L)	FUSED B(+)
40	F62 18RD (2.4L TURBO)	FUSED B(+)
41	X2 20DG/RD (2.0L)	HORN RELAY OUTPUT
41	X2 18DG/RD (2.4L TURBO)	HORN RELAY OUTPUT
42	-	-
43	X3 20BK/RD	HORN RELAY CONTROL

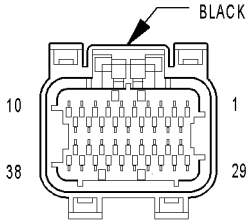

POWERTRAIN CONTROL MODULE C1

POWERTRAIN CONTROL MODULE C1 - BLACK 38 WAY

CAV	CIRCUIT	FUNCTION
1	-	-
2	-	-
3	-	-
4	-	-
5	-	-
6	-	-
7	-	-
8	-	-
9	Z11 18BK/WT	GROUND
10	-	-
11	F12 18DB/WT (2.0L)	FUSED IGNITION SWITCH OUTPUT (RUN-START)
11	F12 18DB/RD (2.4L TURBO)	FUSED IGNITION SWITCH OUTPUT (RUN-START)
12	F11 20RD/WT (2.0L AUTO-STICK)	IGNITION SWITCH OUTPUT (OFF-RUN-START)
12	F11 20RD/WT (2.0L EX-CEPT AUTOSTICK)	FUSED IGNITION SWITCH OUTPUT (RUN-START)
13	G7 20WT/OR	VEHICLE SPEED SIGNAL
14	G9 20GY/BK	BRAKE FLUID LEVEL SWITCH SENSE
15	K55 18LB (2.4L TURBO)	TIP SOL CONTROL
16	-	-
17	K150 18DB/YL (2.4L TURBO)	SURGE SOL CONTROL
18	Z12 18BK/TN	GROUND
19	-	-
20	G6 20GY	OIL PRESSURE SIGNAL
21	-	-
22	K145 20BR/OR	AAT SIGNAL
23	K153 18LB (2.4L TURBO)	TIP SIGNAL
24	-	-
25	D20 20LG	SCI RECEIVE (PCM)
26	D6 20PK/LB (2.0L)	SCI RECEIVE (TCM)
27	K6 20VT/WT (2.0L)	5 VOLT SUPPLY
27	K6 18VT/WT (2.4L TURBO)	5 VOLT SUPPLY
28	K137 18DB/GY (2.4L TURBO)	WASTEGATE SOL CONTROL
29	A14 18RD/WT	FUSED B(+)
30	A41 16YL	FUSED IGNITION SWITCH OUTPUT (START)
31	-	-
32	-	-
33	-	-
34	-	-
35	-	-
36	D21 20PK	SCI TRANSMIT (PCM)
37	D15 20WT/DG (2.0L)	SCI TRANSMIT (TCM)
38	D25 20VT/YL	PCI BUS (PCM)

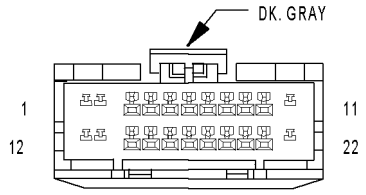

RADIO C1

RADIO C1 - DK. GRAY 22 WAY

CAV	CIRCUIT	FUNCTION
1	M11 16PK/LB	FUSED B(+)
2	X12 18RD/WT	FUSED IGNITION SWITCH OUTPUT (RUN-ACC)
3	E2 20OR	PANEL LAMPS DRIVER
4	-	-
5	-	-
6	-	-
7	X54 20VT	RIGHT FRONT SPEAKER (+)
8	X56 20DB/RD	RIGHT FRONT SPEAKER (-)
9	X55 20BR/RD	LEFT FRONT SPEAKER (-)
10	X53 20DG	LEFT FRONT SPEAKER (+)
11	Z9 16BK	GROUND
12	-	-
13	-	-
14	D25 20VT/YL	PCI BUS
15	-	-
16	-	-
17	-	-
18	X51 20BR/YL	LEFT REAR SPEAKER (+)
19	X57 20BR/LB	LEFT REAR SPEAKER (-)
20	X58 20DB/OR	RIGHT REAR SPEAKER (-)
21	X52 20DB/WT	RIGHT REAR SPEAKER (+)
22	-	-

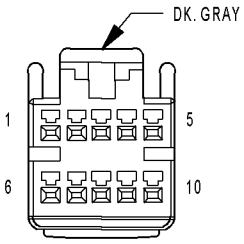

RADIO C2
(COMPACT DISC CHANGER)

RADIO C2 (COMPACT DISC CHANGER) - DK. GRAY 10 WAY

CAV	CIRCUIT	FUNCTION
1	24GY/WT	AUDIO OUT RIGHT
2	24BK/OR	GROUND
3	22BK	SHIELD GROUND
4	24VT/YL	PCI BUS
5	24RD	FUSED IGNITION SWITCH OUTPUT
6	24DG/WT	AUDIO OUT LEFT
7	22BK/YL	GROUND
8	-	-
9	24OR/YL	PANEL LAMPS DIMMER SIGNAL
10	22GY/YL	B(+)

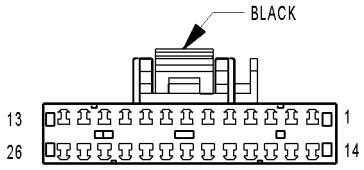

REMOTE KEYLESS ENTRY MODULE

REMOTE KEYLESS ENTRY MODULE - BLACK 26 WAY

CAV	CIRCUIT	FUNCTION
1	L4 16VT/WT (EXCEPT EX-PORT)	DIMMER SWITCH LOW BEAM OUTPUT
1	L63 18DG/RD (EXPORT)	LEFT TURN SIGNAL
2	L7 18BK/YL (EXCEPT EX-PORT)	PARK LAMP SWITCH OUTPUT
2	L62 18BR/RD (EXPORT)	RIGHT TURN SIGNAL
3	F35 18RD	FUSED B(+)
4	P33 18OR/BK	DOOR LOCK RELAY OUTPUT
5	P34 18PK/BK	DRIVER DOOR UNLOCK RELAY OUTPUT
6	P36 18PK/VT	DOOR UNLOCK RELAY OUTPUT
7	M9 20LB/OR	PASSENGER DOOR AJAR/RKE SENSE
8	Z2 18BK/LG	GROUND
9	M1 18PK	FUSED B(+)
10	P97 20LG (LHD)	LEFT DOOR SWITCH MUX
10	P96 20LG/BK (RHD)	RIGHT DOOR SWITCH MUX
11	P96 20LG/BK (LHD)	RIGHT DOOR SWITCH MUX
11	P97 20LG (RHD)	LEFT DOOR SWITCH MUX
12	Z1 20BK	GROUND
13	-	-
14	Q33 20BR/LB	DECKLID RELEASE RELAY CONTROL
15	X5 22WT/RD (EXPORT)	SIREN CONTROL
16	Q2 16LG/BK	DECKLID RELEASE RELAY OUTPUT
17	G69 20BK/OR	VTSS INDICATOR DRIVER
18	X3 22BK/RD	HORN RELAY CONTROL
19	D25 20VT/YL	PCI BUS
20	G120 18WT/DB (EXPORT)	INTRUSION SENSOR SIGNAL
21	-	-
22	G5 20DB/WT	FUSED IGNITION SWITCH OUTPUT (RUN-START)
23	G70 20BR/TN (EXPORT)	HOOD AJAR SWITCH SENSE
24	G71 20VT/BK	DECKLID SECURITY SWITCH SENSE
25	G75 20TN/BK (LHD)	LEFT FRONT DOOR AJAR SWITCH SENSE
25	G74 20TN/RD (RHD)	RIGHT FRONT DOOR AJAR SWITCH SENSE
26	-	-

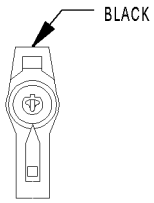

RIGHT CYLINDER LOCK SWITCH (EXPORT)

RIGHT CYLINDER LOCK SWITCH (EXPORT) - BLACK 2 WAY

CAV	CIRCUIT	FUNCTION
1	P96 18LG	RIGHT DOOR SWITCH MUX
2	Z14 18BK	GROUND

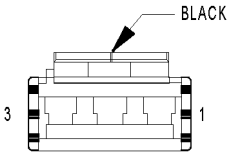

RIGHT DOOR LOCK SWITCH

RIGHT DOOR LOCK SWITCH - BLACK 3 WAY

CAV	CIRCUIT	FUNCTION
1	-	-
2	P96 20LG/BK	RIGHT DOOR SWITCH MUX
2	P96 18LG (ALARM)	RIGHT DOOR SWITCH MUX
3	Z14 20BK/YL	GROUND
3	Z14 18BK (ALARM)	GROUND
3	Z14 20BK/YL (EXCEPT ALARM)	GROUND

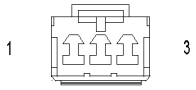

RIGHT FRONT DOOR SPEAKER

RIGHT FRONT DOOR SPEAKER - 3 WAY

CAV	CIRCUIT	FUNCTION
1	X56 20DB/RD	RIGHT FRONT SPEAKER (-)
2	-	-
3	X54 20VT	RIGHT FRONT SPEAKER (+)

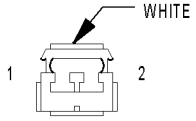

RIGHT INSTRUMENT PANEL SPEAKER

RIGHT INSTRUMENT PANEL SPEAKER - WHITE 2 WAY

CAV	CIRCUIT	FUNCTION
1	X54 20VT	RIGHT FRONT SPEAKER (+)
2	X56 20DB/RD	RIGHT FRONT SPEAKER (-)

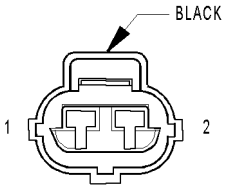

RIGHT REAR DOOR AJAR SWITCH

RIGHT REAR DOOR AJAR SWITCH - BLACK 2 WAY

CAV	CIRCUIT	FUNCTION
1	G76 20TN/YL	PASSENGER DOOR AJAR/RKE SENSE
2	Z1 20BK	GROUND

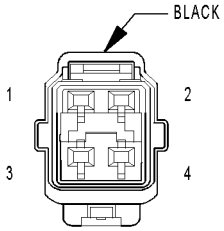

RIGHT REAR DOOR LOCK MOTOR/AJAR SWITCH

RIGHT REAR DOOR LOCK MOTOR/AJAR SWITCH - BLACK 4 WAY

CAV	CIRCUIT	FUNCTION
1	G77 20TN/OR	PASSENGER DOOR AJAR/RKE SENSE
2	Z1 20BK	GROUND
3	P36 18PK/VT	DOOR UNLOCK RELAY OUTPUT
4	P33 18OR/BK	DOOR LOCK RELAY OUTPUT

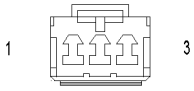

RIGHT REAR SPEAKER

RIGHT REAR SPEAKER - 3 WAY

CAV	CIRCUIT	FUNCTION
1	X52 20DB/WT	RIGHT REAR SPEAKER (+)
2	-	-
3	X58 20DB/OR	RIGHT REAR SPEAKER (-)

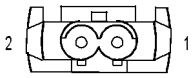

RIGHT SEAT AIRBAG SQUIB

RIGHT SEAT AIRBAG SQUIB - 2 WAY

CAV	CIRCUIT	FUNCTION
1	R32 18OR	RIGHT SEAT SQUIB LINE 2
2	R34 18WT	RIGHT SEAT SQUIB LINE 1

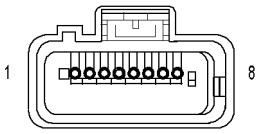

RIGHT SIDE IMPACT AIRBAG CONTROL MODULE

RIGHT SIDE IMPACT AIRBAG CONTROL MODULE - 8 WAY

CAV	CIRCUIT	FUNCTION
1	F15 20DG/WT	FUSED IGNITION SWITCH OUTPUT (RUN-START)
2	-	-
3	R34 20OR/YL	RIGHT SEAT SQUIB LINE 1
4	R32 20YL/OR	RIGHT SEAT SQUIB LINE 2
5	Z6 20BK/PK	GROUND
6	-	-
7	-	-
8	D25 20VT/YL	PCI BUS

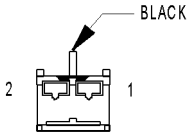

SEAT BELT SWITCH

SEAT BELT SWITCH - BLACK 2 WAY

CAV	CIRCUIT	FUNCTION
1	G10 20LG/RD	SEAT BELT SWITCH SENSE
2	Z1 20BK	GROUND

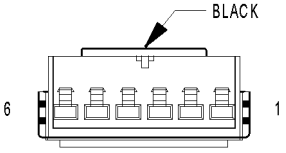

SENTRY KEY IMMOBILIZER MODULE

SENTRY KEY IMMOBILIZER MODULE - BLACK 6 WAY

CAV	CIRCUIT	FUNCTION
1	-	-
2	D25 22VT/YL	PCI BUS
3	-	-
4	G5 20DB/WT	FUSED IGNITION SWITCH OUTPUT (RUN-START)
5	Z2 20BK/LG	GROUND
6	M1 20PK	FUSED B(+)

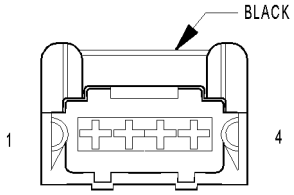

SIREN (EXPORT)

SIREN (EXPORT) - BLACK 4 WAY

CAV	CIRCUIT	FUNCTION
1	X5 20WT/RD	SIREN CONTROL
2	X5 20WT/RD	SIREN CONTROL
3	Z1 18BK	GROUND
4	M1 18PK	FUSED B(+)

10.0 SCHEMATIC DIAGRAMS

10.1 AIRBAG SYSTEM

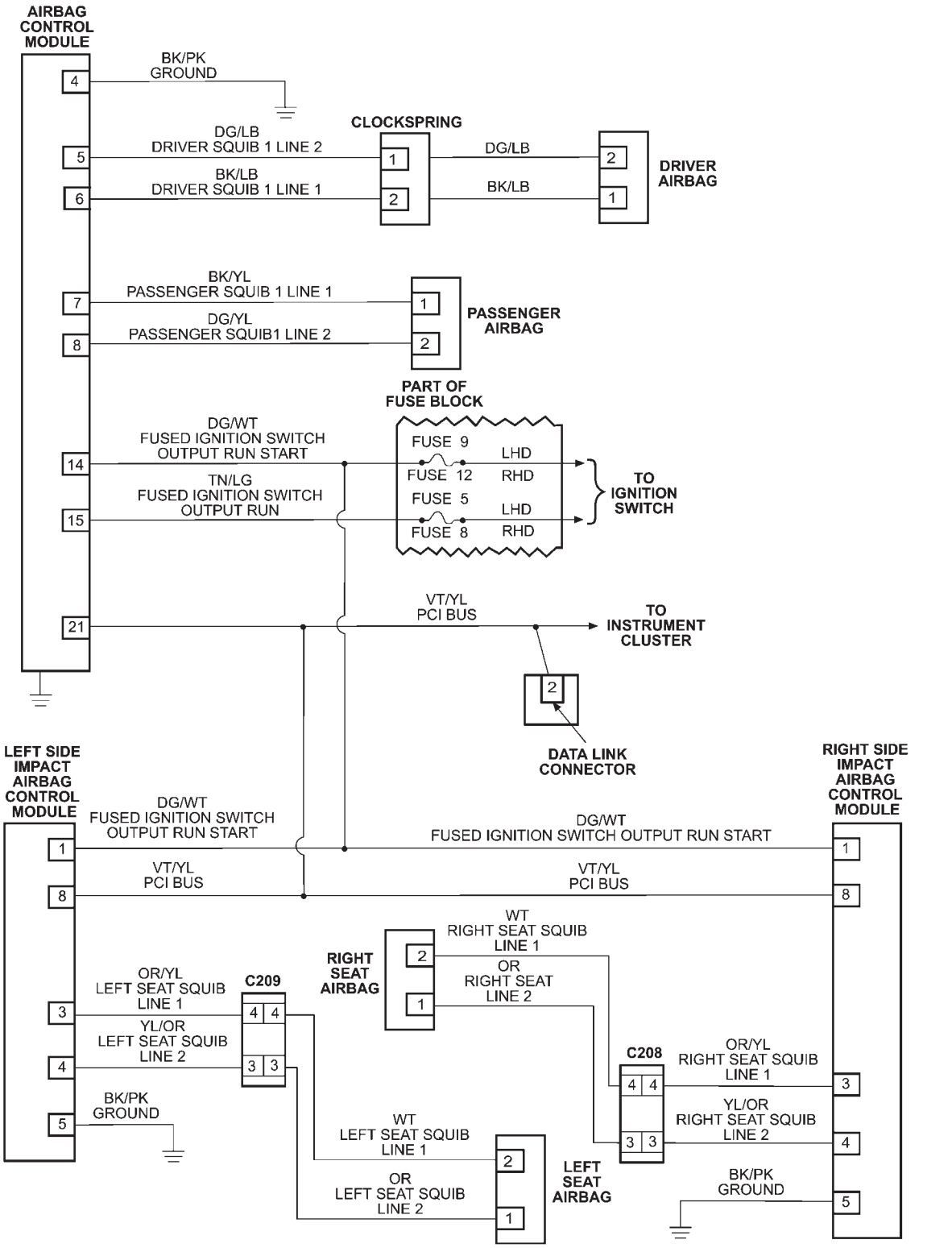

10.2 AUDIO SYSTEM

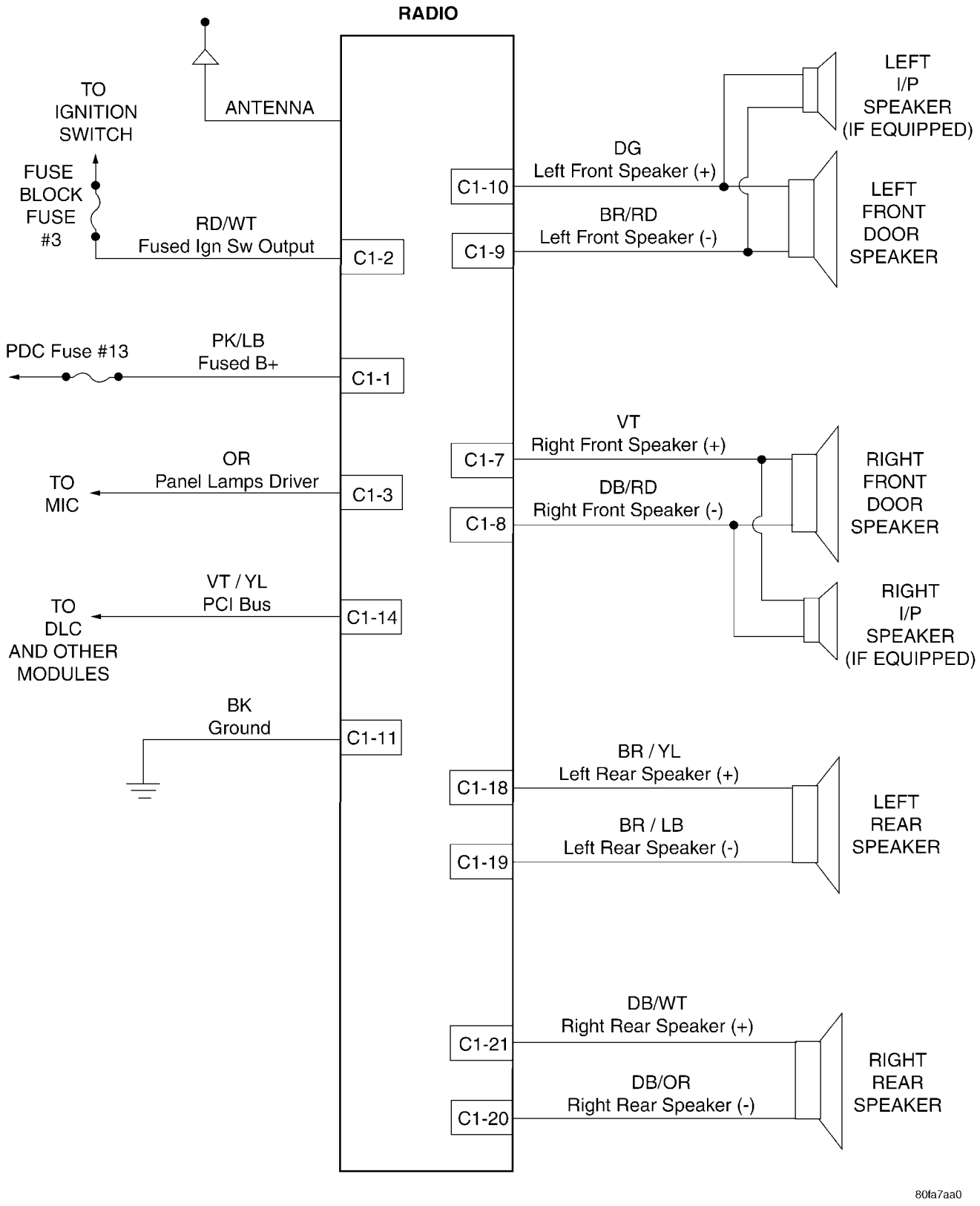

10.2.1 CD CHANGER

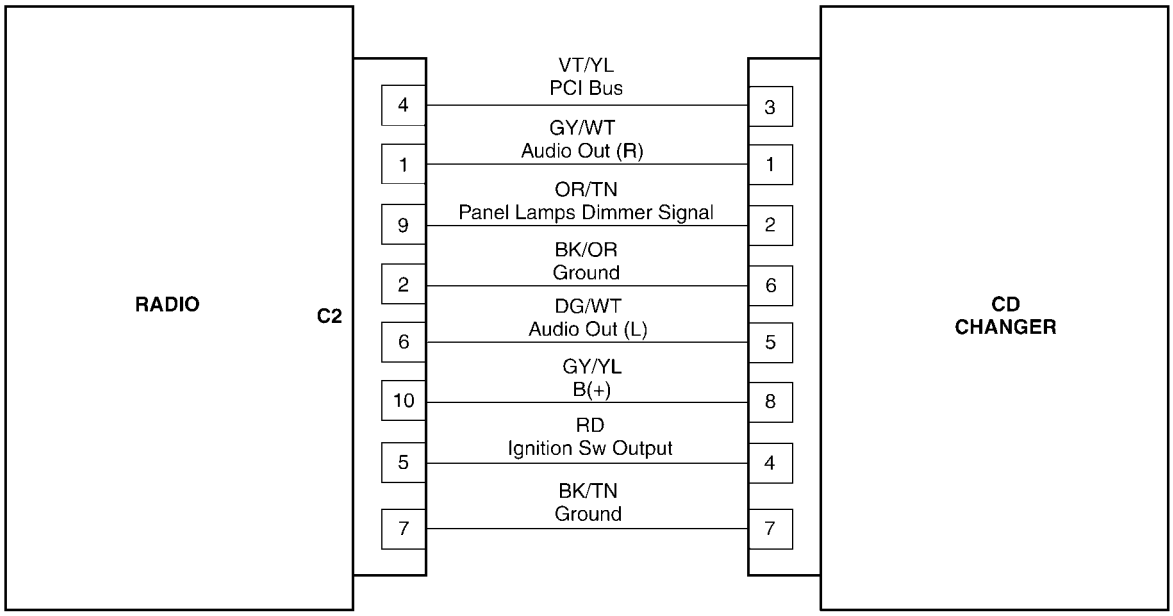

80fa7a4b

10.3 COMPASS/TEMPERATURE MIRROR

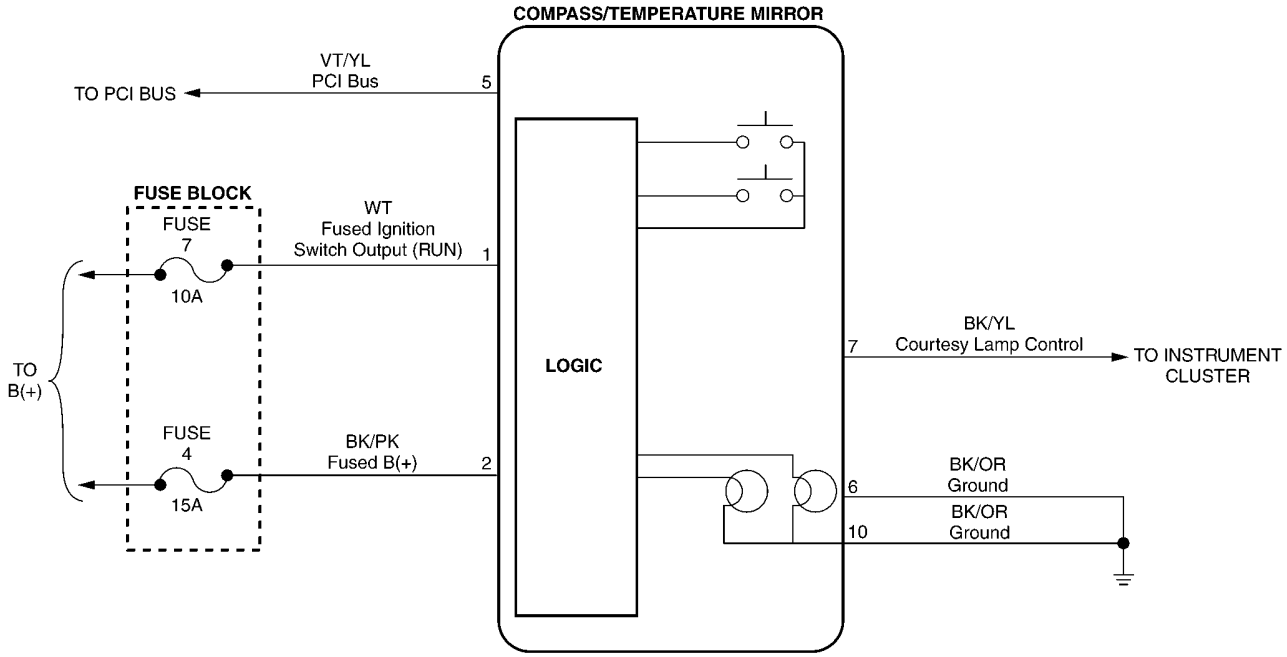

811cec8f

10.4 EXTERIOR LIGHTING

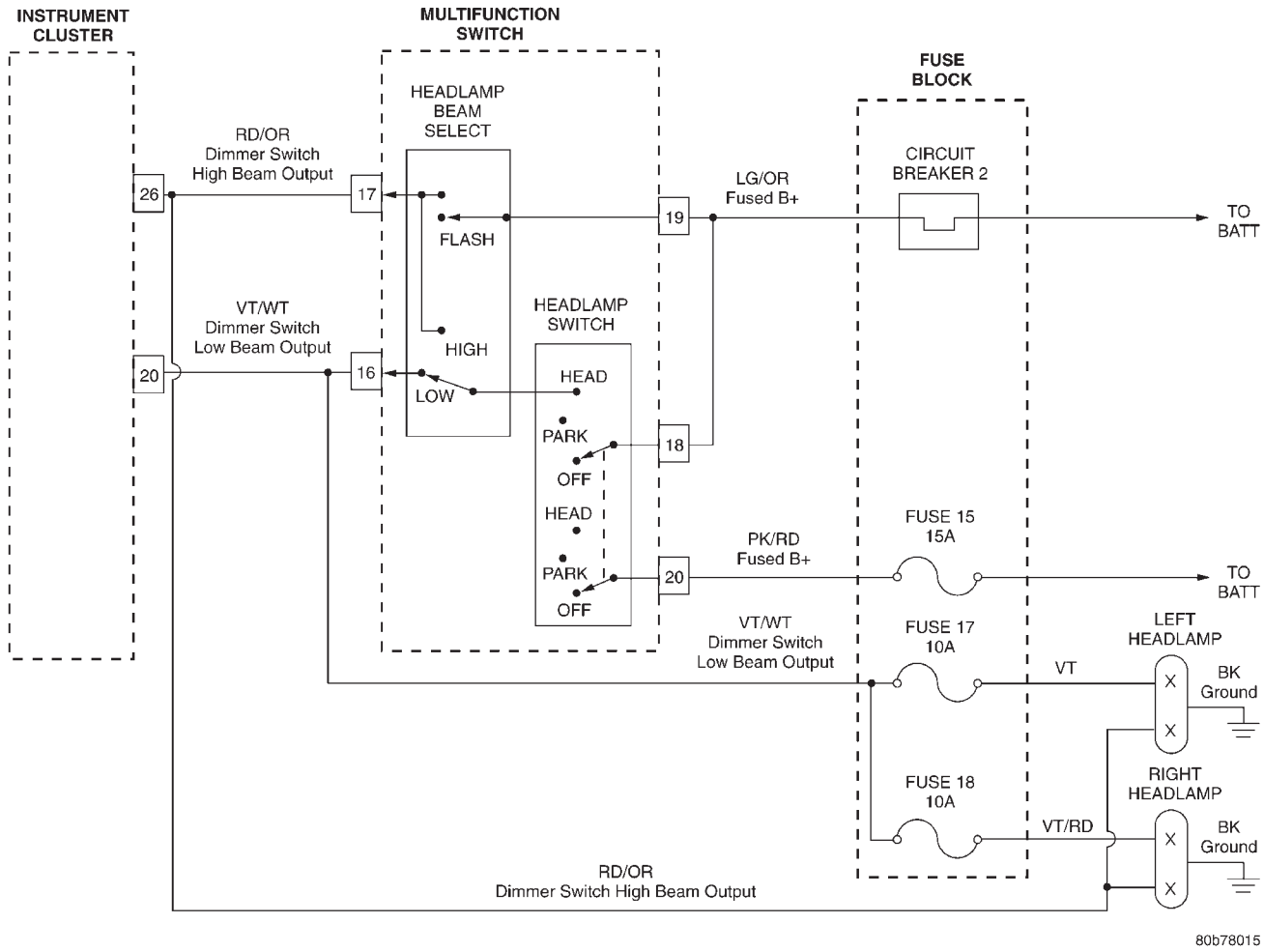

10.5 INSTRUMENT CLUSTER

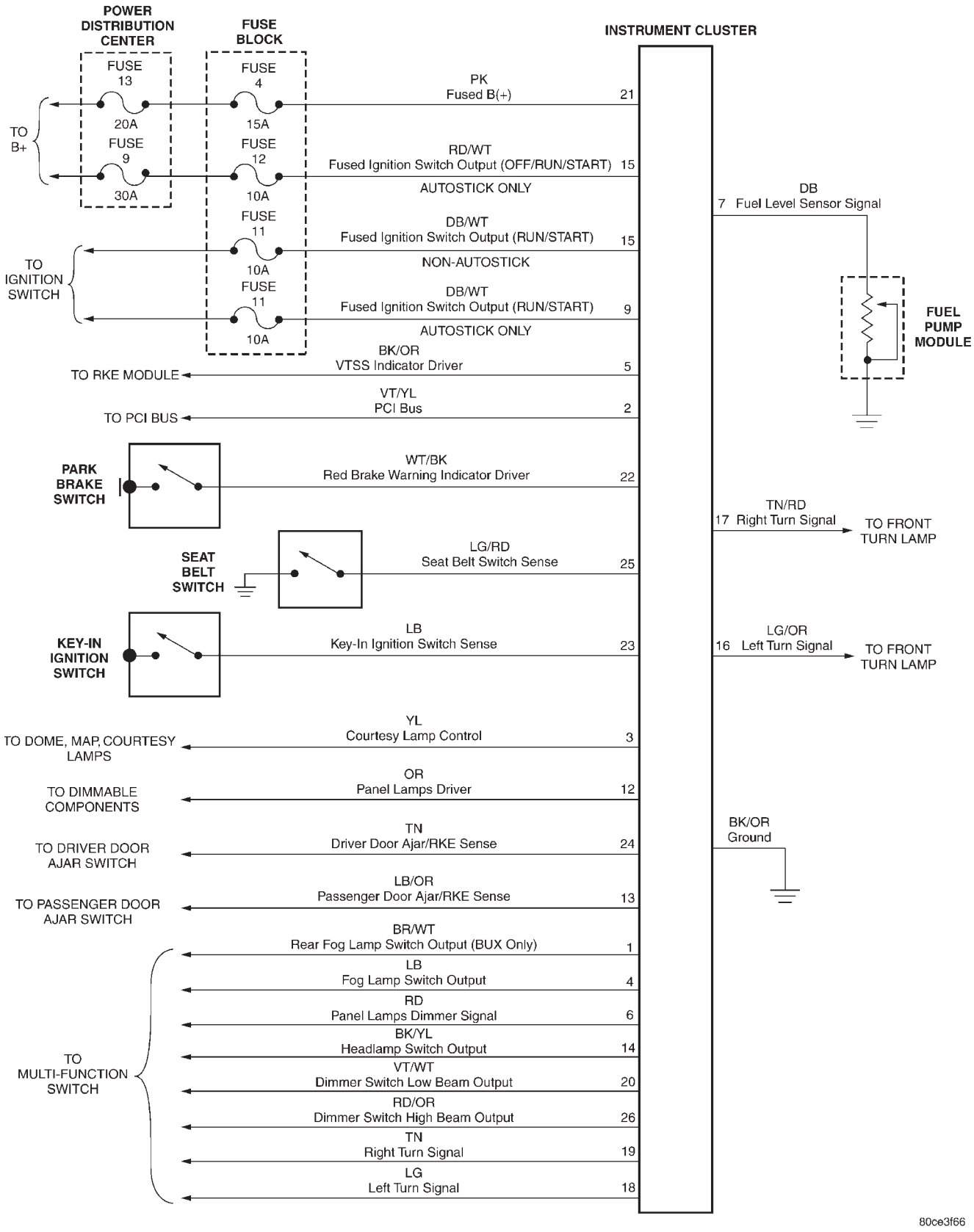

10.6 INTERIOR LIGHTING

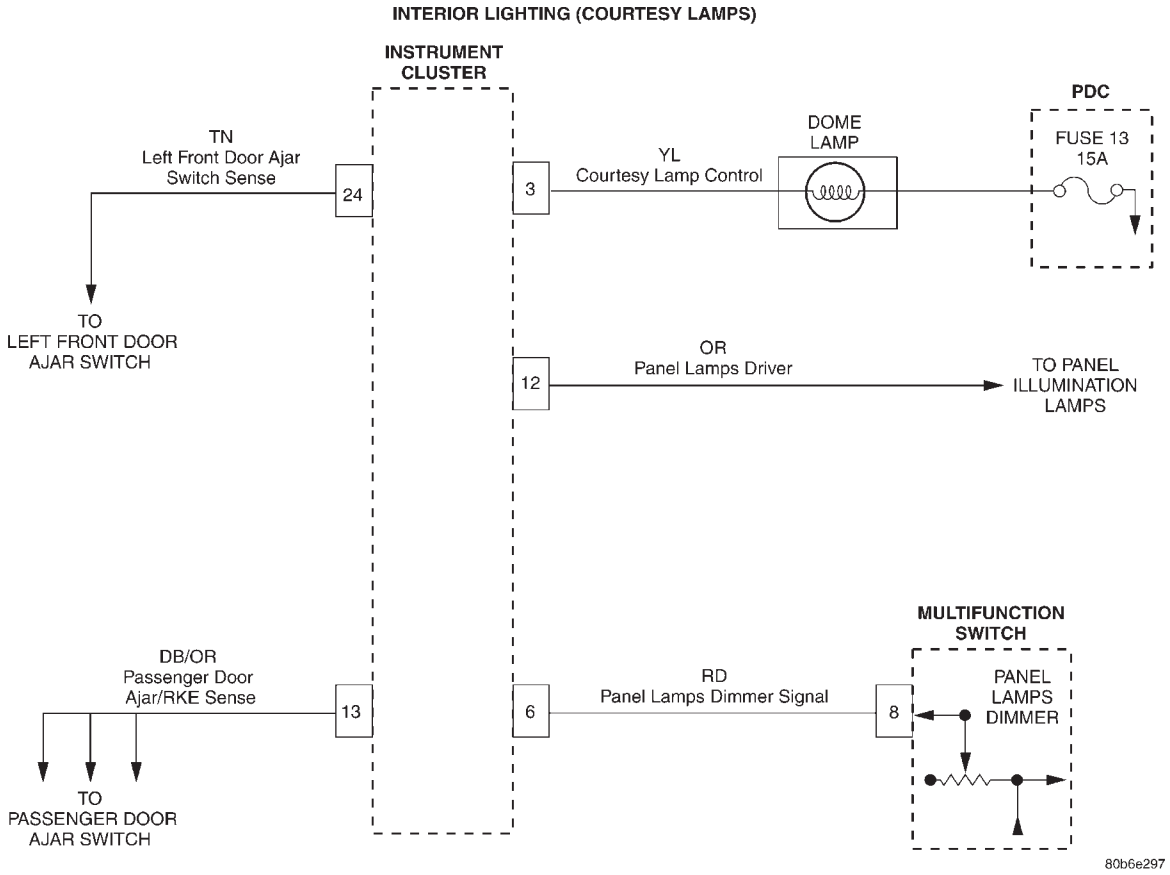

10.7 POWER DOOR LOCKS/RKE

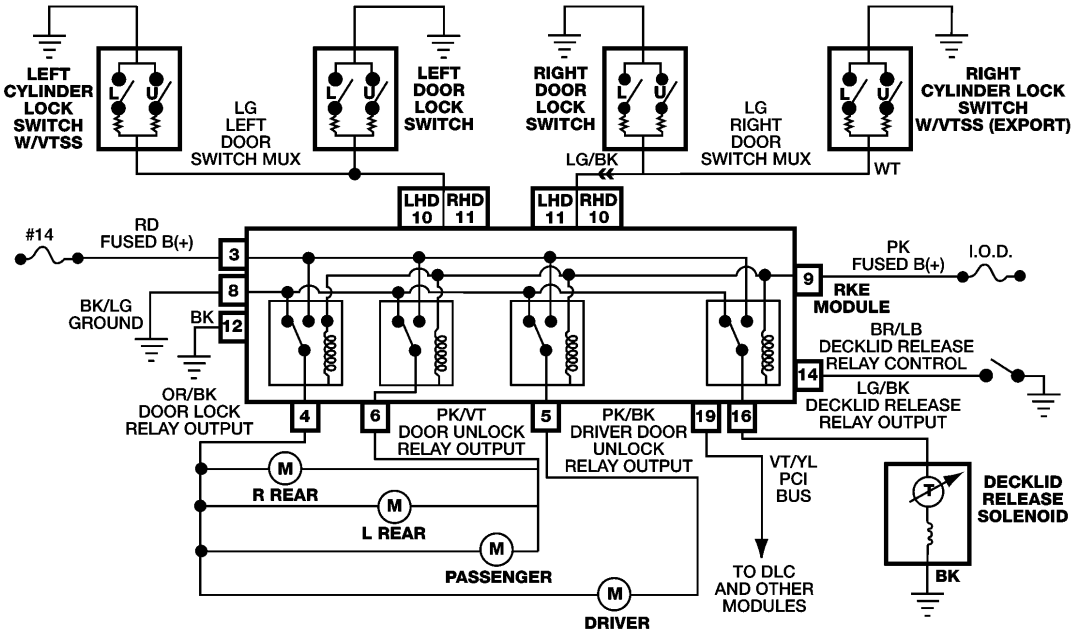

10.8 VEHICLE COMMUNICATION

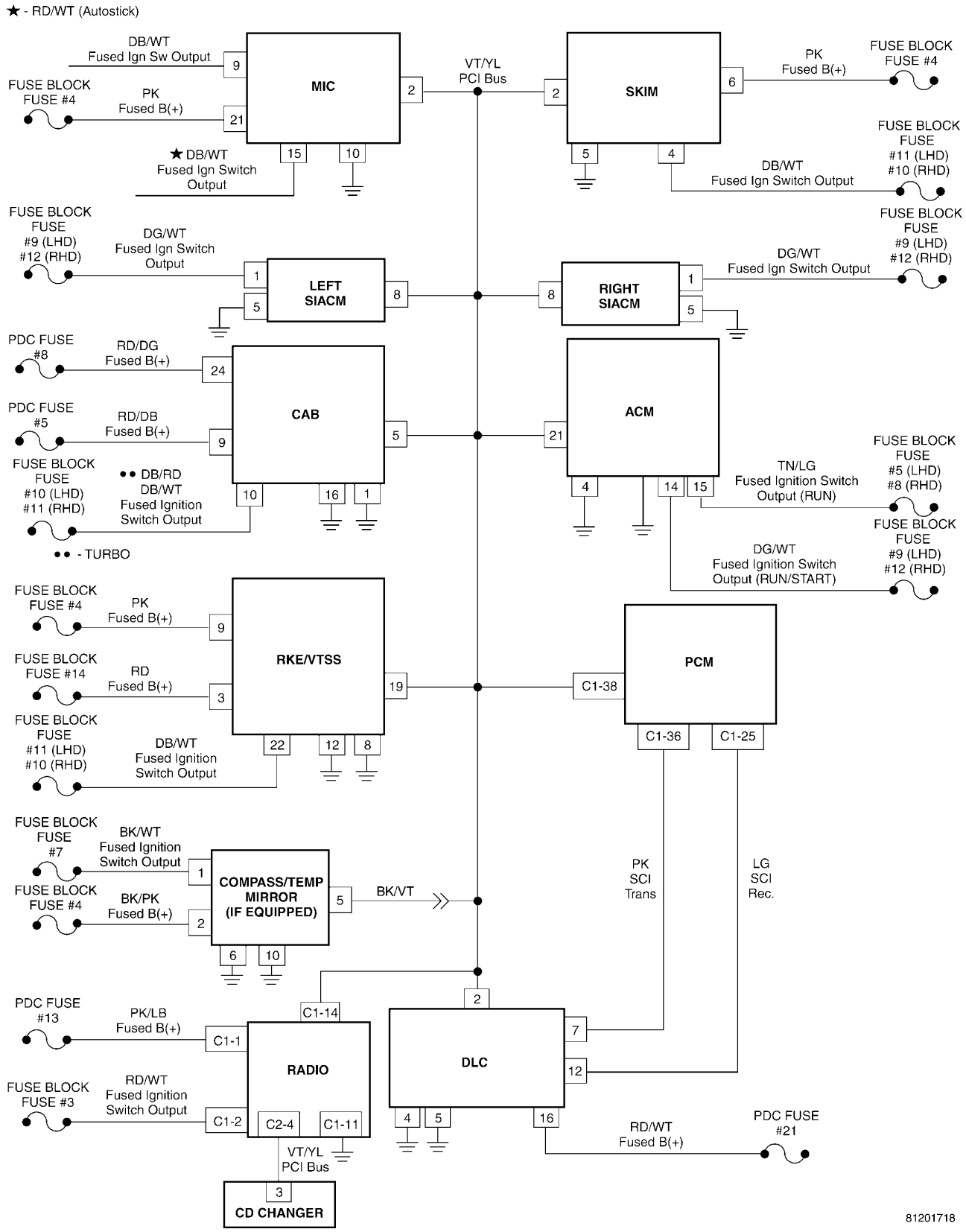
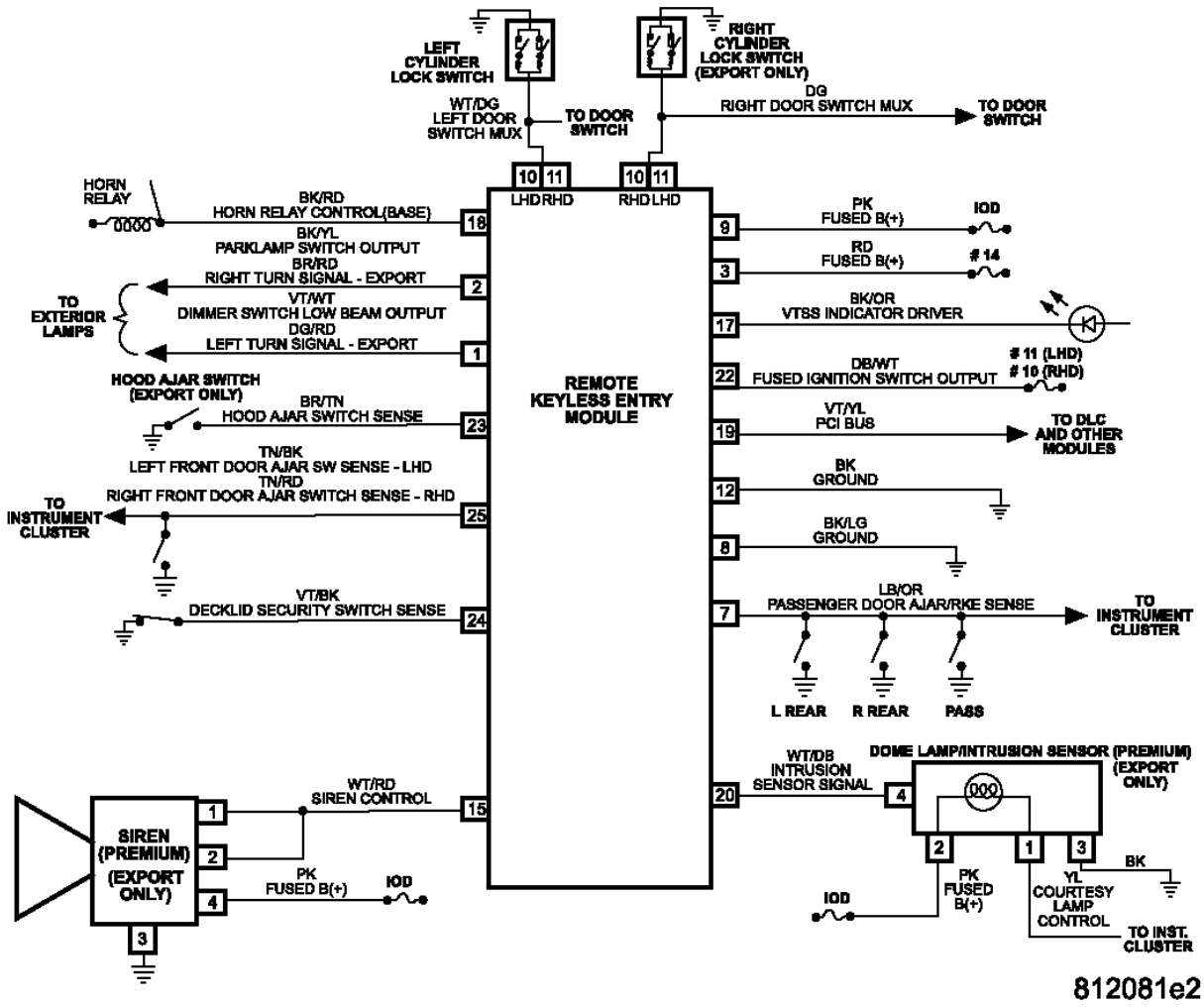
10.9 VEHICLE THEFT SECURITY SYSTEM